Gearbox housing/ ducting and sealing systems

Sheathed sealing ring system

multitronic® is equipped with a new sheathed sealing ring system.
The sheathed sealing rings seal the pressure cylinder and the variable-displacement cylinder of the primary pulley set, the secondary pulley set and the piston for the forward clutch.

The O-ring has two tasks:
To press down and seal the sheathed sealing ring.

The oil pressure present assists the sheathed sealing ring with contact pressure application.

Advantages of the sheathed sealing ring system:

- Good antifriction properties
- Low displacement forces
- Wear
- Stable at high pressures

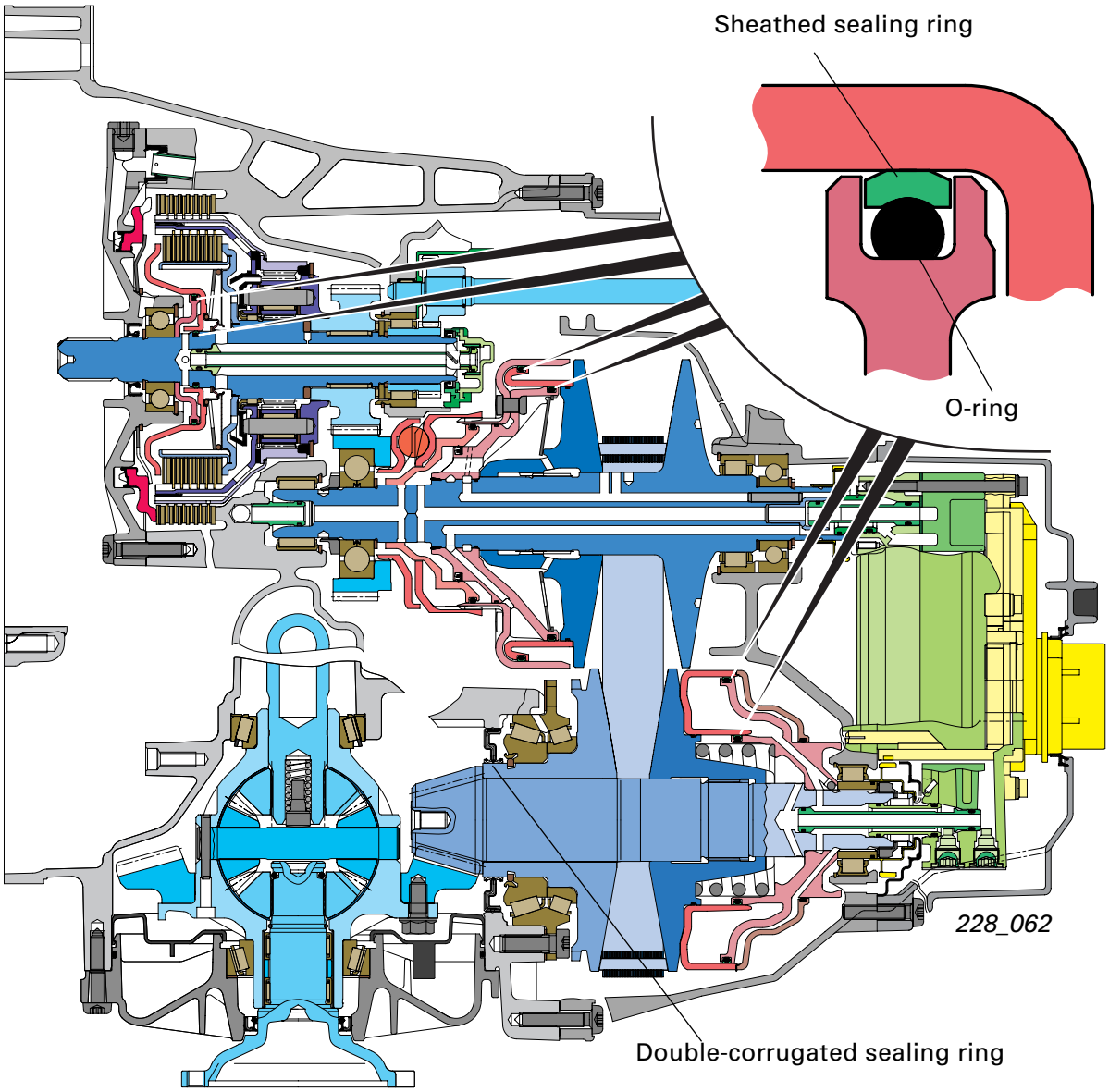

Gearbox modules

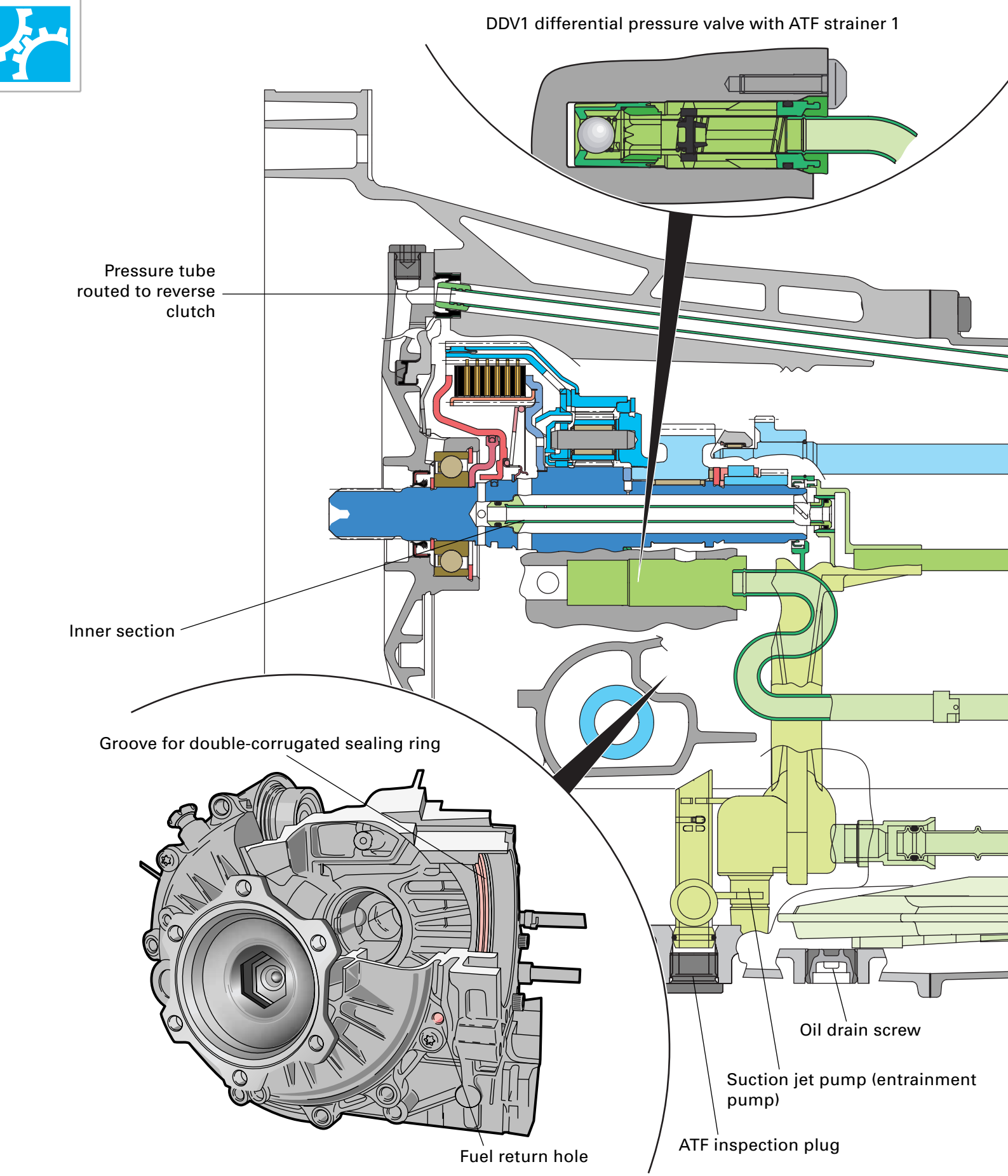

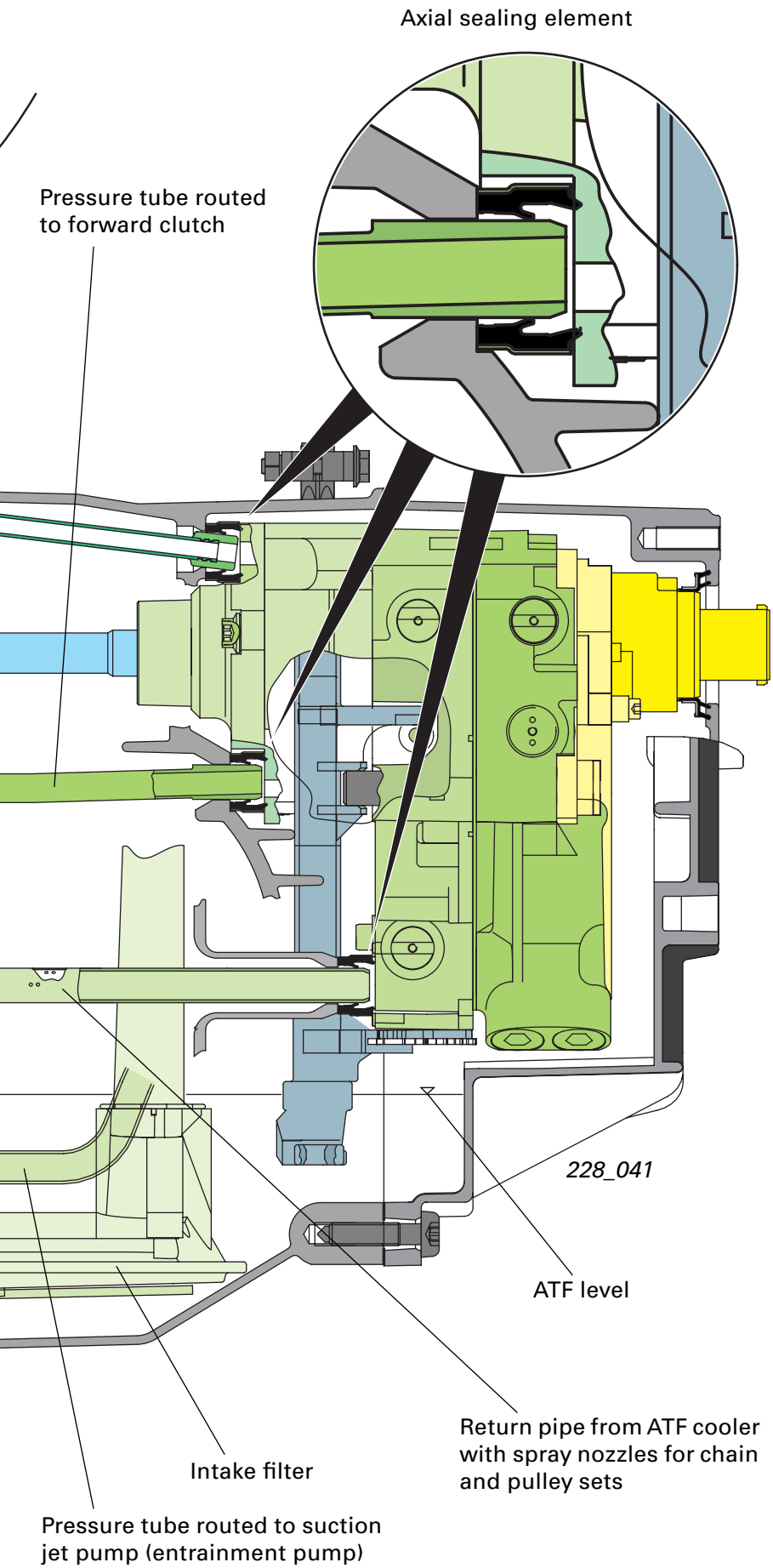

To save weight, the three-piece gearcase is manufactured from the AZ91 HP magnesium alloy.
This alloy is highly corrosion resistant, easy to process and has an 8 kg weight advantage over a conventional aluminium alloy.
As a special feature, the ATF pressurised oil is not distributed via housing ducts - as is usual on automatic gearboxes - but almost exclusively via pipes.

So-called axial sealing elements are used to seal the pipe connections. The axial sealing element of the pressure pipes have two sealing lips which apply a higher contact pressure - as a result of the oil pressure - and therefore seal the pipes reliably. Diagonal pipe connections can also be sealed without difficulty using this technology (e.g. pressure tube connected to reverse clutch).
The axial sealing element oil pump intake fitting has sealing beads which seal the fitting by virtue of their contact pressure.

The double-corrugated sealing ring (see page 57) separates the ATF reservoir from the final drive oil reservoir. It prevents the ATF from entering the final drive and oil from the final drive entering the ATF reservoir.
Leaks in the double-corrugated sealing ring become visible at the fuel return hole.

Hydraulic chart

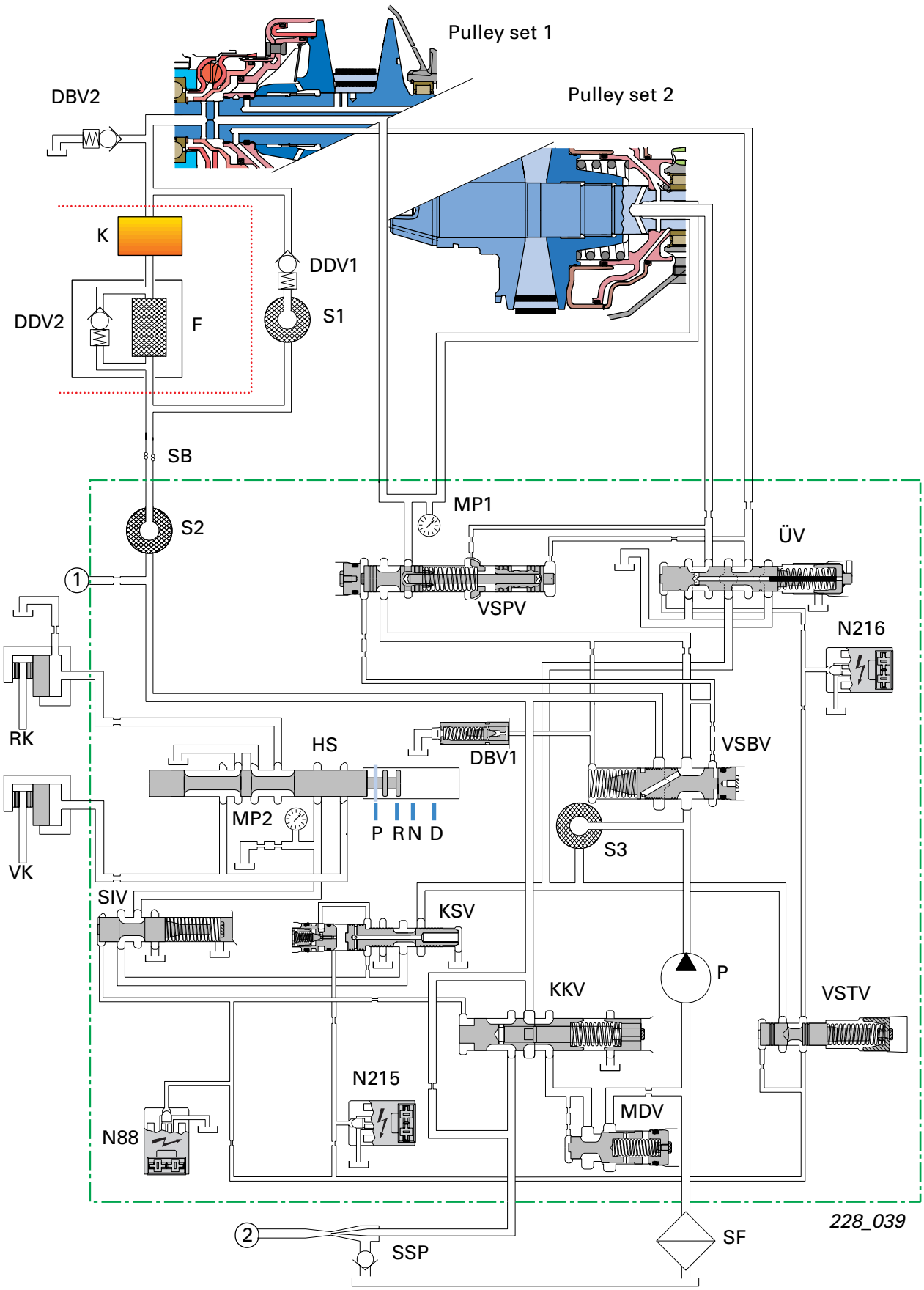

Explanatory notes on the hydraulic chart
(selector lever position P and engine “OFF”)

DBV2	Pressure limiting valve 1
DBV2	Pressure limiting valve 2
DDV2	Differential pressure valve 1
DDV2	Differential pressure valve 2
F	ATF filter
HS	Manual selector valve
K	ATF cooler
KKV	Clutch cooling valve
KSV	Clutch control valve
MDV	Minimum pressure valve
MP1	Measuring point for contact pressure (registered via G194)
MP2	Measuring point for clutch pressure (registered via G193)
N88	Solenoid valve 1 (clutch cooling/ safety shut-off)
N215	Automatic gearbox pressure control valve -1- (clutch)
N216	Automatic gearbox pressure control valve -2- (ratio)
P	Oil pump
PRND	Selector lever position
RK	Reverse clutch
S1	ATF strainer 1
S2	ATF strainer 2
S3	ATF strainer 3
SB	4 Spray holes for pulley set lubrication/cooling
SF	ATF intake filter
SIV	Safety valve
SSP	Suction jet pump (entrainment pump)
ÜV	Reduction valve
VK	Forward clutch
VSBV	Volumetric flow rate limiting valve
VSPV	Pressurising valve
VSTV	Pilot pressure value

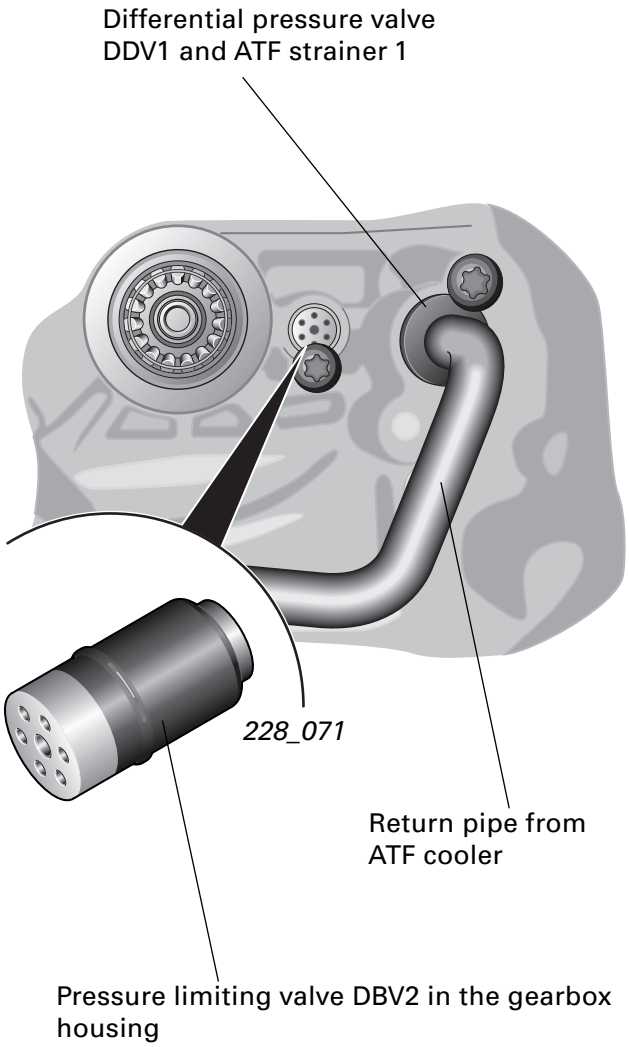

① To splash oil cover

② To the clutches

In the oil sump

Hydraulic control unit

Peripheral components in the vehicle

ATF cooling

The ATF coming pulley set 1 initially passes through the ATF cooler. The ATF flows through the ATF filter before it is returned to the hydraulic control unit.

As is the case with the CVT, the ATF cooler is integrated in the “engine cooler”. Heat is exchanged with the coolant in the engine cooling circuit (oil- coolant heat exchanger).

The DDV1 differential pressure valve protects the ATF cooler against excessively high pressures (ATF cold). When the ATF is cold, a large pressure difference develops between the supply line and the return line. When a specific pressure differential is reached, the DDV1 opens and the supply line is short-circuited with the return line. This also causes the temperature of the ATF to rise rapidly.

The DDV2 differential pressure valve opens when the flow resistance of the ATF filter is too high (e.g. filter blockage). The prevents the DDV1from opening and the ATF cooling system from being disabled by the backpressure.

If the ATF cooler is leaky, coolant can enter the ATF. Even small quantities of coolant in the ATF can have an adverse effect on clutch control.

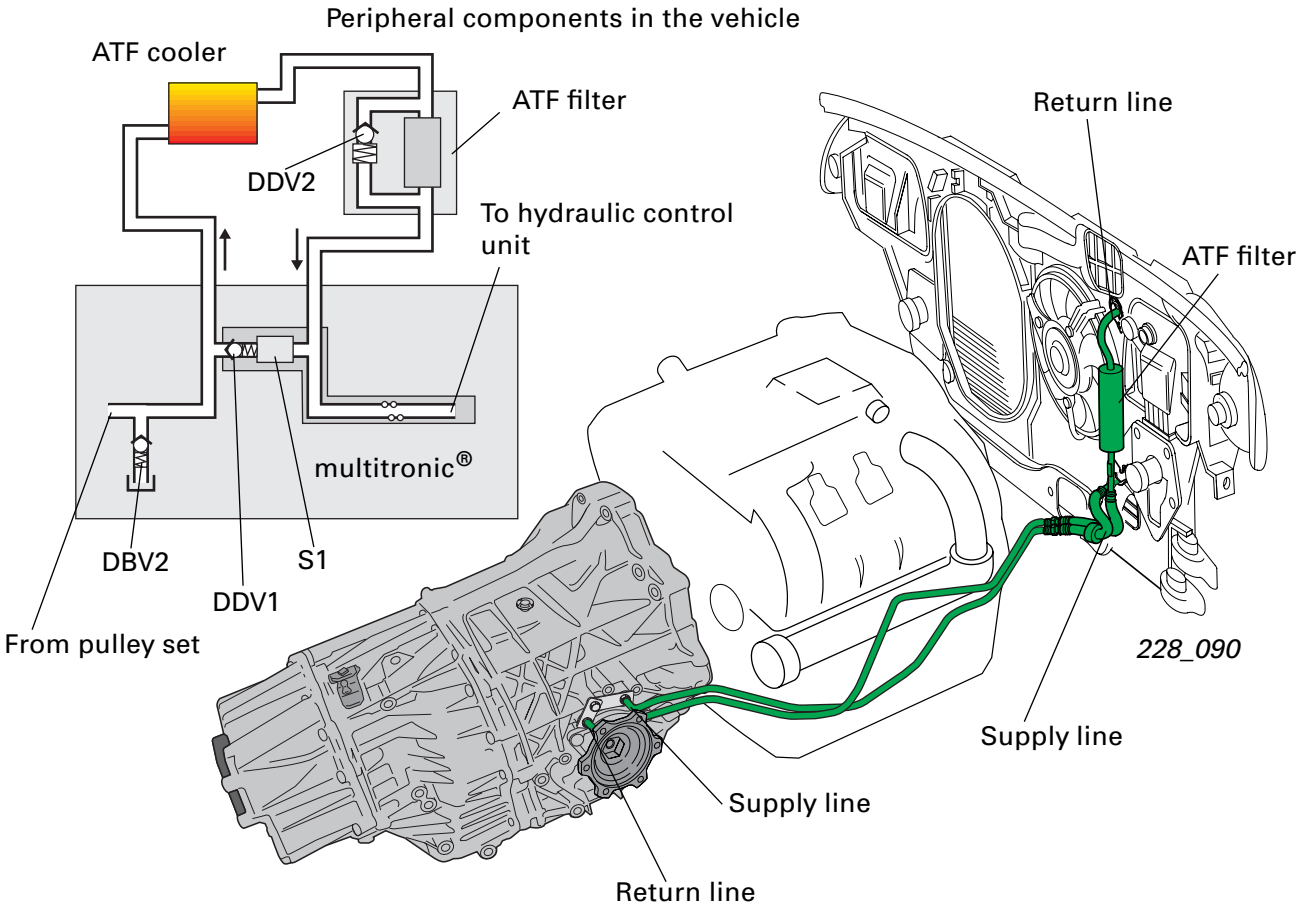

multitronic control unit J217

A special feature of multitronic® is the integration of the electronic control unit in the gearbox.
The control unit is attached directly to the hydraulic control with bolts.

The connection to the three pressure regulating valves is made directly from the control unit by means of robust plug-in contacts (gooseneck contacts); there are no wiring connections. A 25-pin compact connector forms the interface to the vehicle.

A further new feature is the integration of sensor technology in the control unit.

- F125 - Multi-functional switch
- G182 - Gearbox input speed sender
- G195 - Gearbox output speed sender
- G196 - Gearbox output speed sender -2-
- G93 - Gearbox oil (ATF) temperature sender
- G193Automatic gearbox hydraulic pressure sender -1- (clutch pressure)
- G194 - Automatic gearbox hydraulic pressure sender -2- (contact pressure)

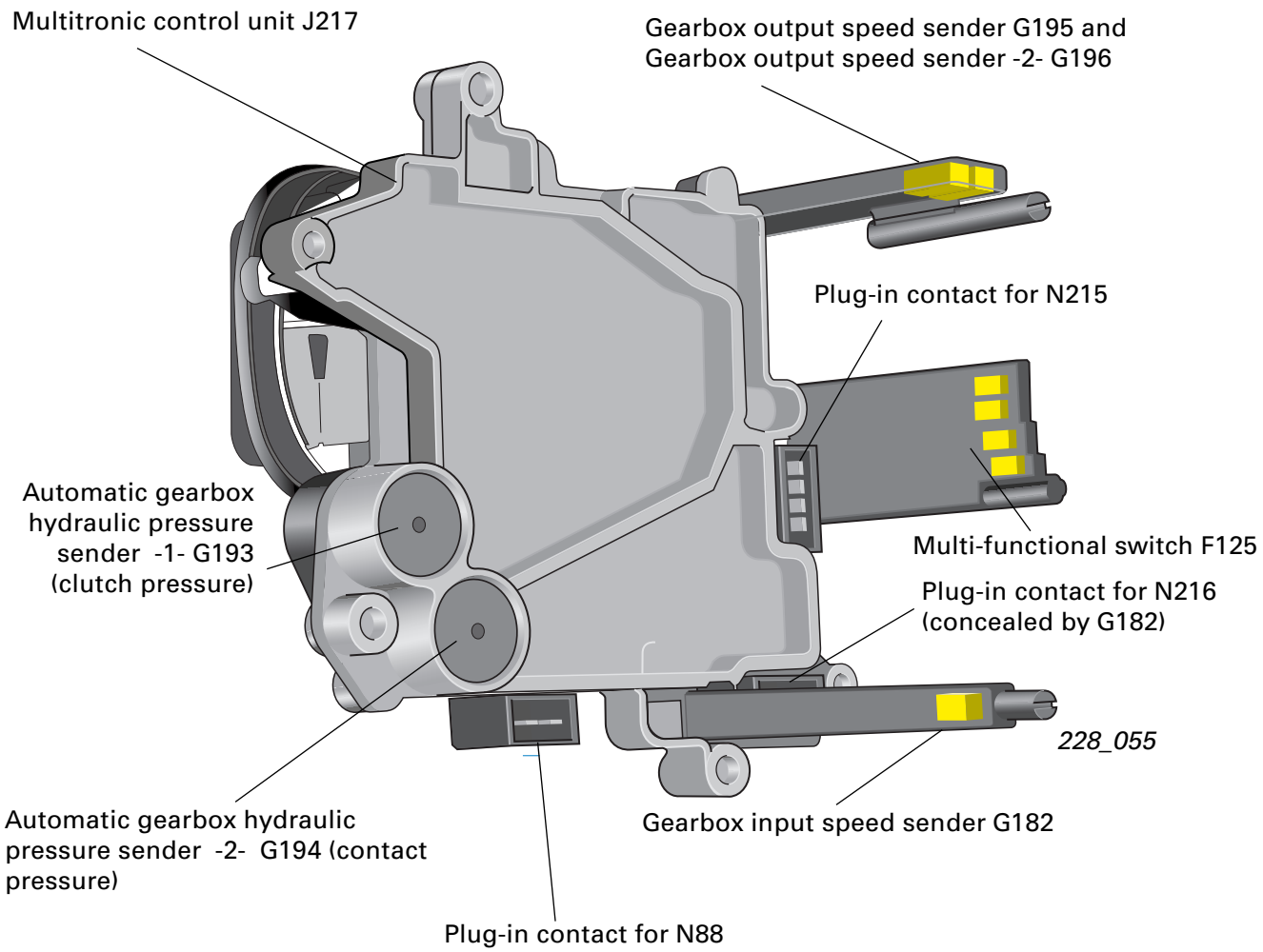

Gearbox control

A strong aluminium plate acts as the base for the electronics and serves to dissipate heat. The housing is made of plastic and securely riveted to the base. It accommodates all the sensors, so neither wiring nor plug-in contacts are necessary.

Since the majority of all electrical failures are attributable to faulty wiring and plug-in contacts, this construction offers a very high degree of reliability.

The engine speed sender and the multi-functional switch are designed as Hall sensors.

Hall sensors are free of mechanical wear. Their signal is immune to electromagnetic interference, which improves their reliability still further.

Due to the fact there are only a few interfaces to the gearbox control unit, the multitronic® does without a separate cable set.
The wiring is integrated in the engine cable set.

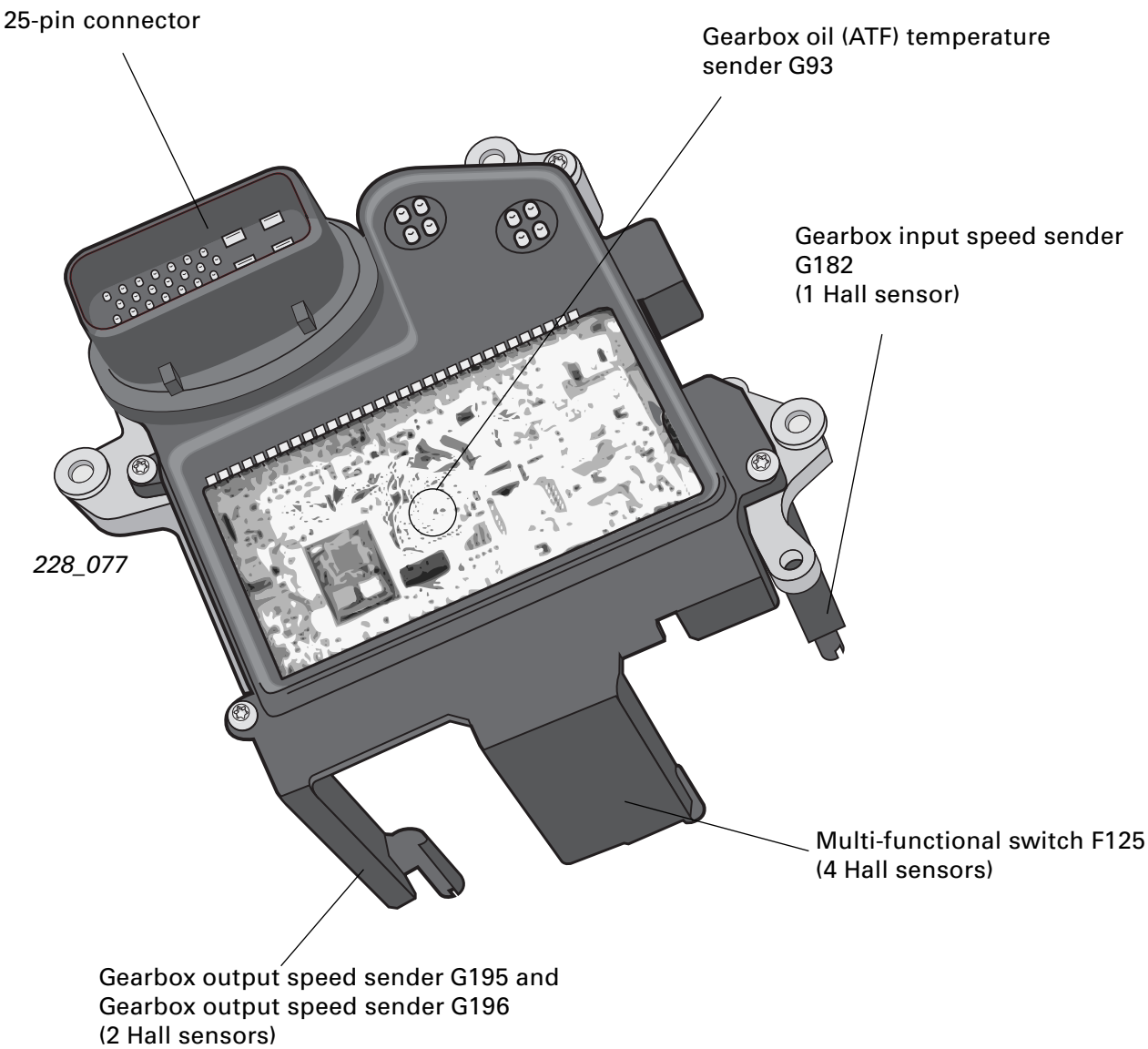

Fault indication

Faults in the multitronic® are to a high degree registered by the extensive self-diagnosis function.
Faults are indicated to the driver via the selector lever position indicator in the dash panel insert depending on their effect on the multitronic® or on driving safety. In this case, the selector lever position indicator also serves as a fault indicator.

As regards faults registered by the multitronic®, a distinction is drawn between 3 states:

1. The fault is stored and a subsitute program enables continued operation of the vehicle (with some restrictions). This state is not indicated to the driver, since it is not critical with regard to driving safety or multitronic®. The driver will notice the fault - if at all - by the way the vehicle handles and will automatically seek the assistance of an Audi service partner.

2. As described item 1, the selector lever position indicator also indicates the presence of a fault by inverting the display. The situation is still not critical for driving safety or for the multitronic®. However, the driver should take the vehicle to an Audi service partner as soon as possible in order to have the fault rectified.

3. As described under item 1, the selector lever position indicator also indicates the presence of a fault by a **flashing**. This state is critical with regard to driving safety or multitronic®. Therefore, the driver is advised to take the vehicle to an Audi service partner immediately in order to have the fault rectified.

When the display is flashing, vehicle operation will - in certain circumstances - only be maintained until the next time the vehicle stops. The vehicle can subsequently no longer be driven!
In certain cases, vehicle operation can be resumed by restarting the vehicle.

228_102

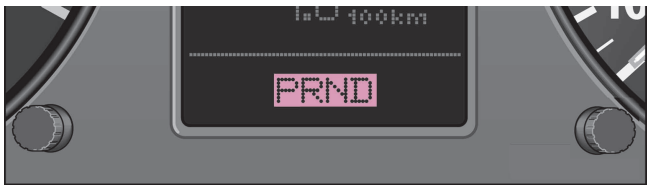

228_103

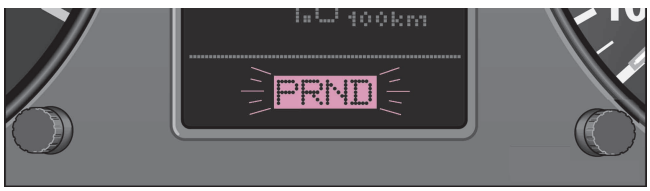

228_104

Sensors

The signals generated by the sensors can no longer measured with conventional equipment due to the fact that the control unit is integrated in the gearbox. A check can only be performed with the Diagnostic Testing and Information System by means of the “Read out fault” and “Read out data blocks” functions.
This Self-Study Program does not therefore represent or describe the sensor signals.

If a sensor fails, the gearbox control unit generates substitute values from the signals from the other sensors as well as the information from the networked control units. Vehicle operation can thus be maintained.

The effects on handling performance are in part so small, the driver will not notice the failure of a sensor immediately.
A further fault can, however, have serious effects.

The sensors are an integral part of the gearbox control unit.
If a sensor fails, the gearbox control unit must be replaced.

Gearbox input speed sender G182 and gearbox output speed senders G195 and G196

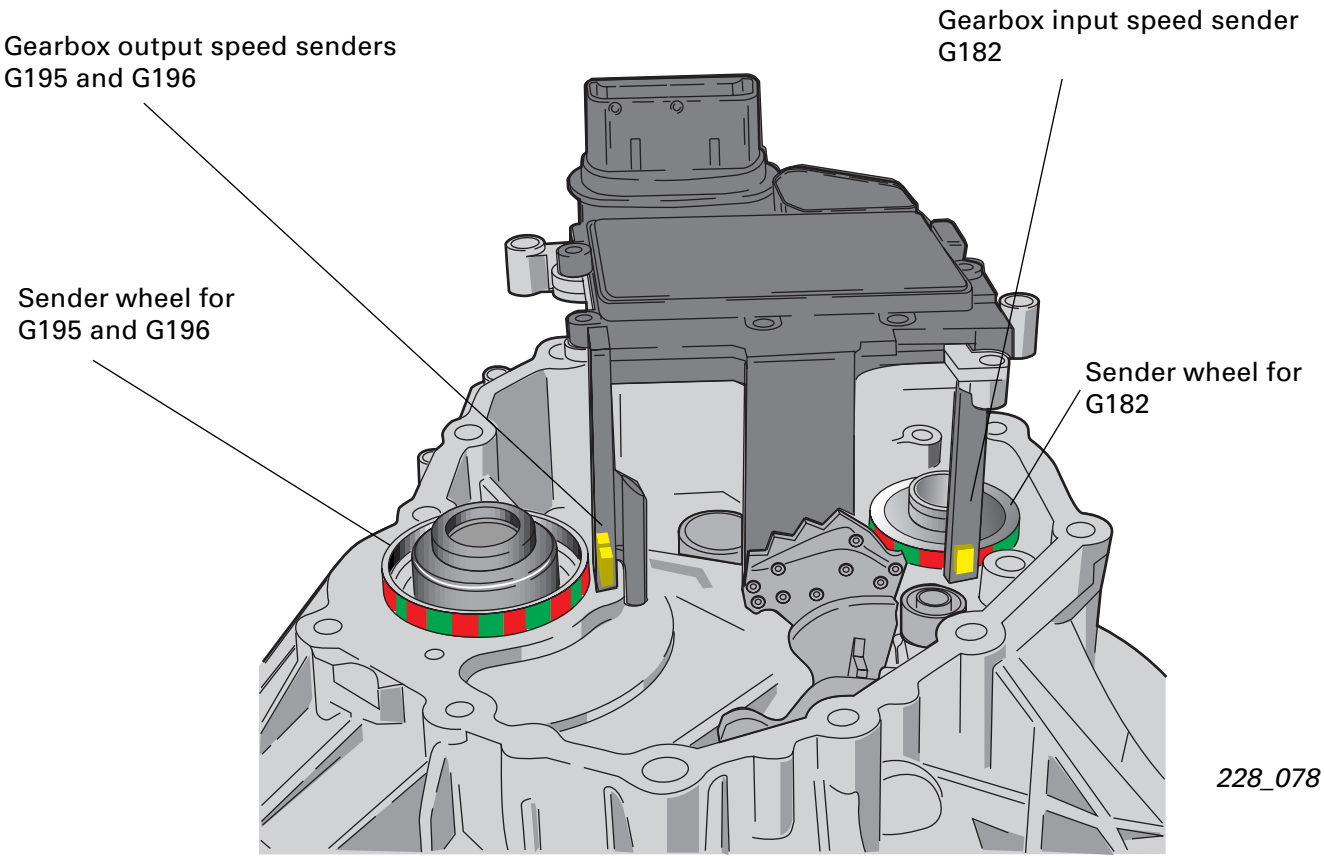

Sender G182 registers the rotation speed of pulley set 1 and therefore represents the actual gearbox input speed.

Gearbox input speed...

... is used together with engine speed for clutch control (for more detailed information, refer to “Micro-slip control”).

... serves as the reference input variable for transmission control (for more detailed information, refer to “Transmission control”).

Effects of failure of G182:

- ▶ The drive-away process is performed according to a fixed characteristic.
- ▶ The micro-slip control and the clutch adaption function are deactivated.

Engine speed is used as a substitute value.

Fault indication: none

Senders G195 and 196 register the rotation speed of pulley set 2 and with it the gearbox output speed.
The signal from G195 is used for registering rotation speed. The signal from G196 is used for recognition of direction of rotation and therefore also for distinguishing between ahead travel and reverse travel (refer to “Creep control”).

“Gearbox output speed” is used.....

... for transmission control,
... for creep control,
... for the hill-holder function,
... for determining the road speed signal for the dash panel insert.

If the G195 fails, the gearbox output speed is determined from the signal from G196. The hill-holder function is deactivated also.

If G196 fails, the hill-holder function is deactivated.

If both sensors fail, a substitute value is generated from the information on wheel speeds (across the CAN bus). The hill-holder function is deactivated.

Fault indication: no

A magnetic ring comprising a row of 40 magnets (for G182) or 32 magnets (for G195 and G196) is located on the end face of the **sender wheel**; the magnets act as N/S poles.

Heavy contamination of the magnetic ring (metal swarf caused by wear) can impair the performance of G182, G195 or G196.
Therefore, metal swarf adhering to the magnetic ring should be removed before performing repairs.

How the direction of rotation is registered:

A magnetic ring comprising row of 32 individual magnets (N/S poles) is located on the end face of the sender wheel for G195 and G196.

The position of sender G195 relative to sender G196 is offset in such a way that the phase angles of the sensor signals are 25% out of phase with one another.

The direction of rotation is essentially registered for the hill-holder function.

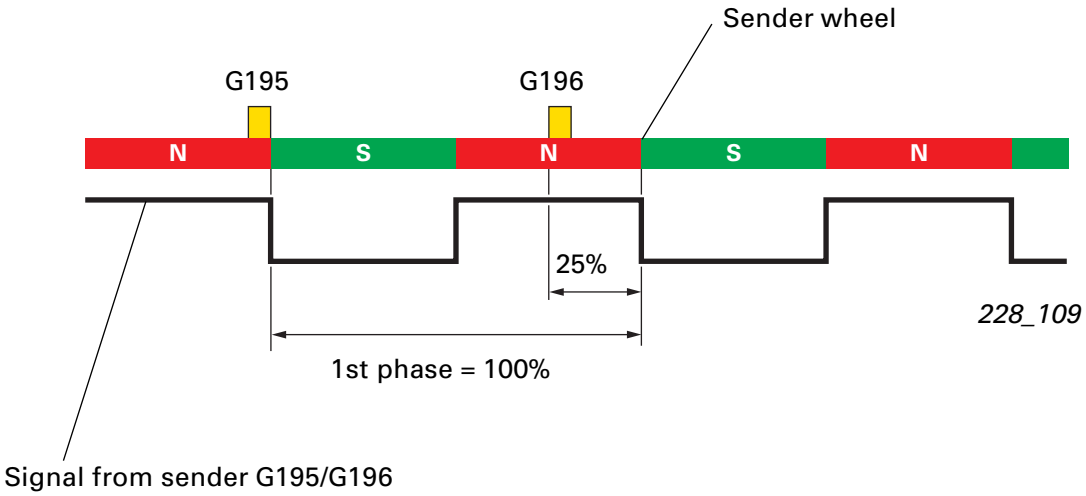

After ignition "ON", the control unit observes the falling edges of the signals from the two sensors and records the level of the other sensors.

As shown in the example, the level of sensor G196 is "Low" at the falling edge of the signal from sensor G195 and the level of G195 is "High" at the falling edge of the signal from sensor G196. The gearbox control unit interprets this "pattern" as ahead travel.

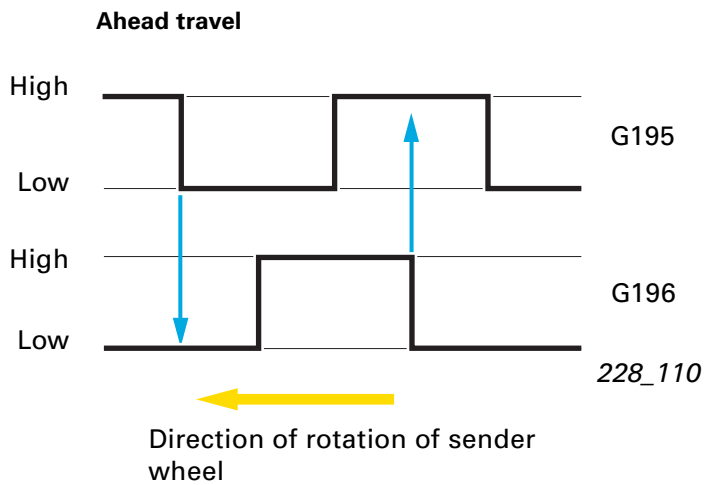

In this example, the level of sensor G196 is “High” at the falling edge of the signal from sensor G195 and the level of G195 is “Low” at the falling edge of the signal from sensor G196. The gearbox control unit interprets this “pattern” as reverse travel.

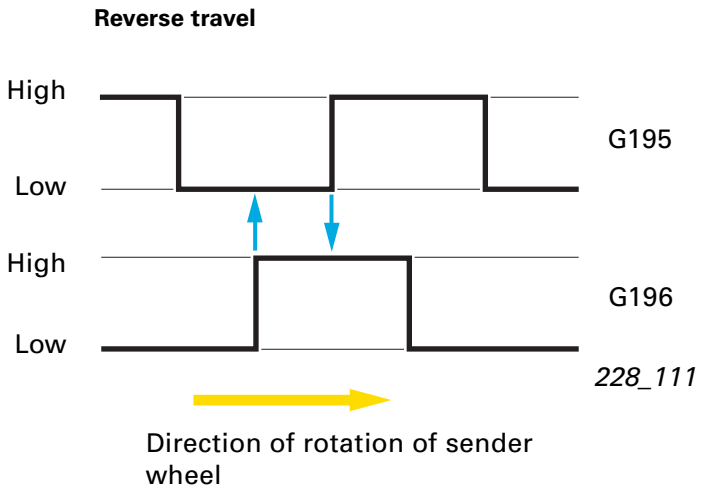

Automatic gearbox hydraulic pressure sender -1- G193

Sensor G193 registers the clutch pressure of the forward- and the reverse-gear clutches and is used for monitoring the clutch function (see “Clutch control”).

Clutch pressure monitoring has a high priority, so malfunctioning of G193 will in most cases cause the safety valve to be activated (see “Safety shut-off”).

Fault indication: flashing

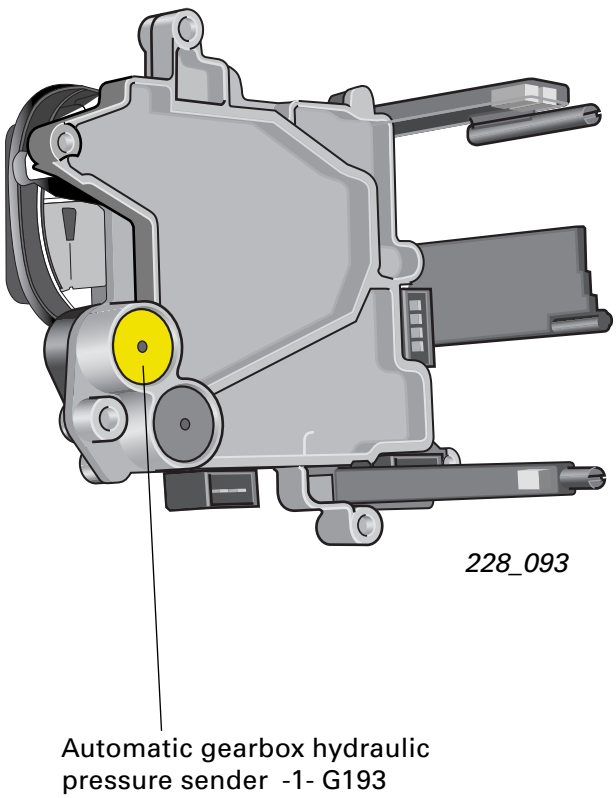

Automatic gearbox hydraulic pressure sender -2- G194

Sensor G194 registers the contact pressure, which is regulated by the torque sensor. As the contact pressure is always proportional to the actual gearbox input torque, the gearbox input torque can be calculated very accurately using G194.

The signal from G194 is used for clutch control (control and adaption of the creep function).
If G194 malfunctions, the creep control adaption function is deactivated. The creep torque is controlled by means of stored values.

Fault indication: none

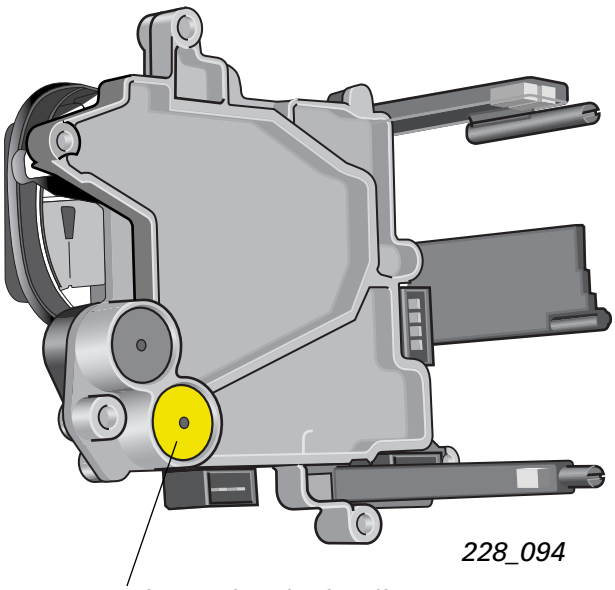

Automatic gearbox hydraulic pressure sender -2- gearbox G194

Multi-functional switch F125

Multi-functional switch F125 comprises 4 Hall sensors which are controlled by the magnetic gate on the selector shaft. The signals from the Hall sensors are interpreted in the same way as the positions of mechanical switches.
A High level means: switch is closed (1).
A Low level means: switch is open (0).

Therefore, a “switch” (Hall sensor) generates two signals: “1” and “0”. 16 different gearshift combinations can be generated with 4 “switches”:

- 4 gearshift combinations for the recognition of selector lever positions P, R, N, D,
- 2 gearshift combinations which are registered as intermediate positions (P-R, R-N-D),
- 10 gearshift combinations which are diagnosed as being faulty.

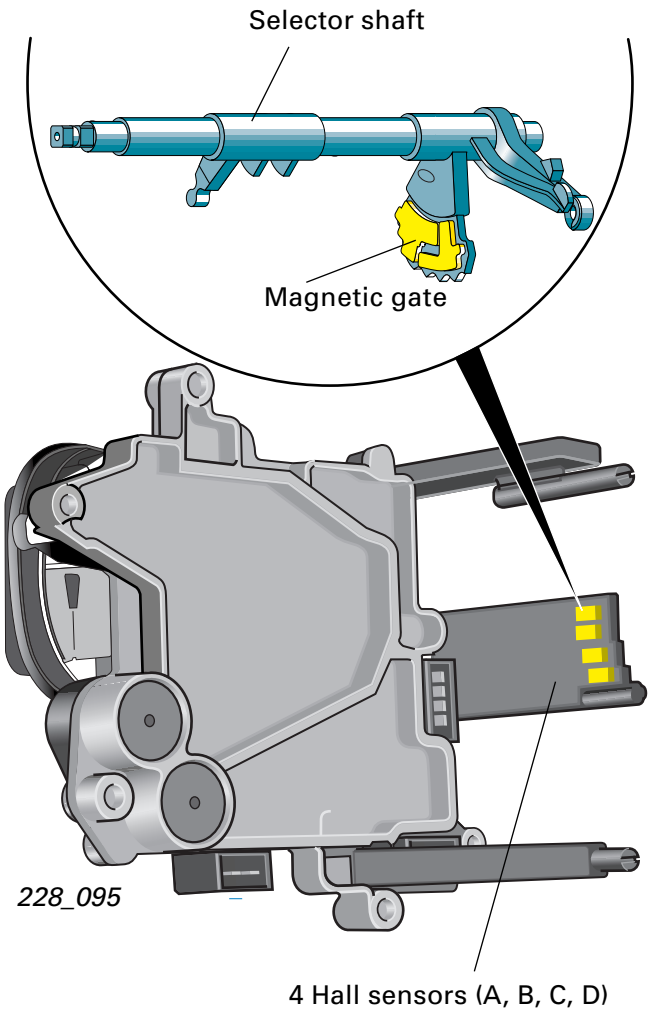

Gearshift combinations

	Hall sensors			
	A	**B**	**C**	**D**
Selector lever position	Gearshift combinations			
P	0	1	0	1
between P-R	0	1	0	0
R	0	1	1	0
between R-N	0	0	1	0
N	0	0	1	1
between N-D	0	0	1	0
D	1	0	1	0
Fault	0	0	0	0
Fault	0	0	0	1
Fault	0	1	1	1
Fault	1	0	0	0
Fault	1	0	0	1
Fault	1	0	1	1
Fault	1	1	0	0
Fault	1	1	0	1
Fault	1	1	1	0
Fault	1	1	1	1

For a table of gearshift combinations, please refer to the Workshop Manual!

Example:

The selector lever is located in selector lever position “N”. If Hall sensor “C” for example fails, gearshift combination “0 0 0 1” will be implemented. The gearbox control unit can no longer identify selector lever position “N”. It recognises the gearshift combination as being faulty and initiates the appropriate subsitute program.

If Hall sensor “D” fails, it will no longer be possible to start the ignition.

The gearbox control unit requires the information on selector lever position for the following functions:

- Starter inhibitor control
- Reversing light control
- P/N interlock control
- Information on the vehicle operating state (forward/reverse/neutral) for clutch control
- Lock ratio when reversing

Faults in F125 manifest themselves very differently. Pulling away may not be permitted in certain circumstances.

Fault indication: flashing

Gearbox oil (ATF) temperature sender G93

Sensor G93 is integrated in the electronics of the gearbox control unit. It records the temperature of the gearbox control unit's aluminium mounting and with it a close approximation of the gearbox oil temperature.

Gearbox oil temperature influences both clutch control and gearbox input speed control. Therefore, it plays an important role in the control and adaption functions.

If G93 fails, the engine temperature is used to calculate a substitute value. Adaption functions and certain control functions are deactivated.

Fault indication: inverted

To protect the component parts of the gearbox, engine performance is reduced if the gearbox oil temperature exceeds approx. 145°C.
If the gearbox oil temperature continues to increase, engine performance is reduced more and more (if necessary, until the engine is running at idling speed).

Fault indication: flashing

"Brake actuated" signal

The "Brake actuated" signal is required for the following functions:

- For the function the selector lever lock
- For creep control
- For the dynamic control program (DCP)

There is no direct interface to the brake light switch. The "Brake actuated" signal is provided by the engine control unit across the CAN bus.

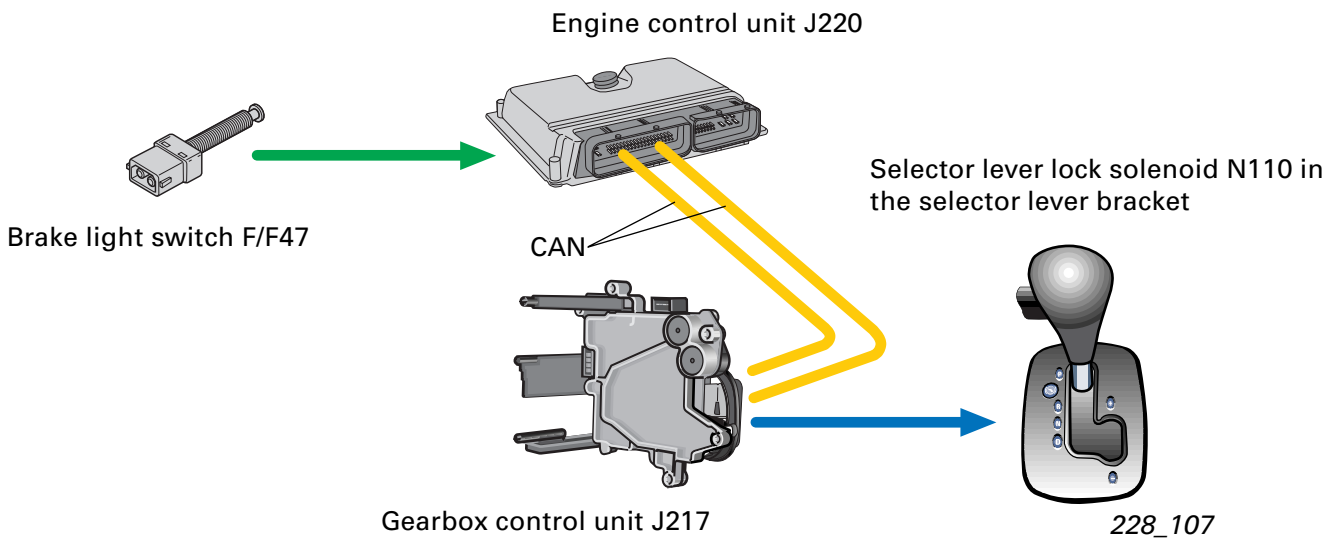

Information “Kickdown”

A separate switch is not used for the kickdown information.

A spring-loaded pressure element located on the accelerator pedal module creates a “point of resistance” conveying a “kickdown feel” to the driver.

When the driver activates the kickdown function, the full-throttle voltage value of senders G79 and G185 (accelerator pedal module) is exceeded. When a defined voltage value corresponding to the kickdown point is exceeded, the engine control unit sends kickdown information to the gearbox control unit across the CAN bus.

In automatic mode, the most sporty control characteristic for maximum acceleration is selected when the kickdown function is activated.

The kickdown function does not have be continuously activated. After the kickdown function has been activated once, the accelerator pedal need only be held in the full-throttle position.

If the accelerator pedal module is replaced, the kickdown shift point must be readapted using the diagnostic testing and information system (refer to Workshop Manual).

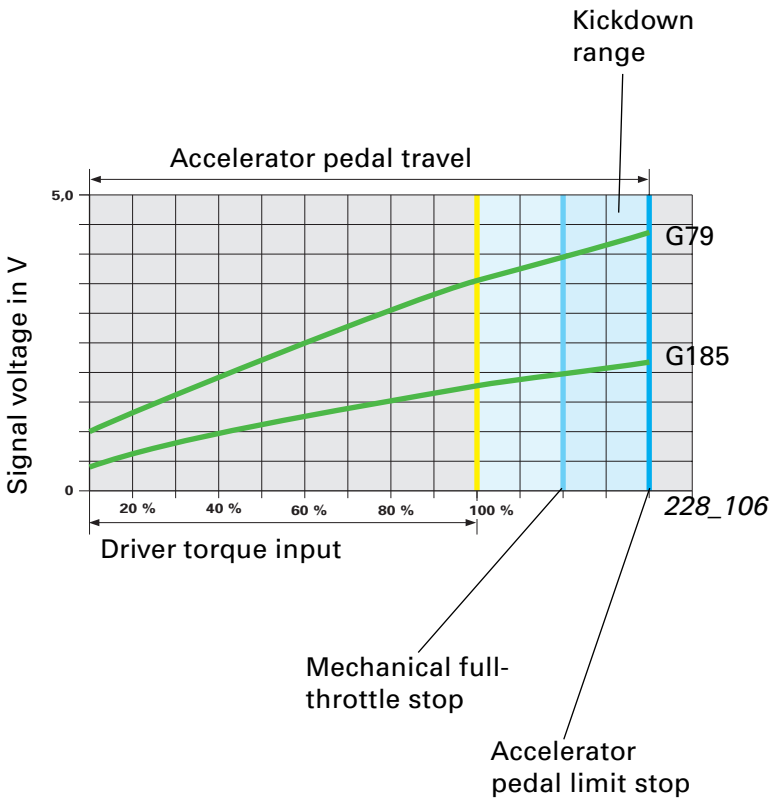

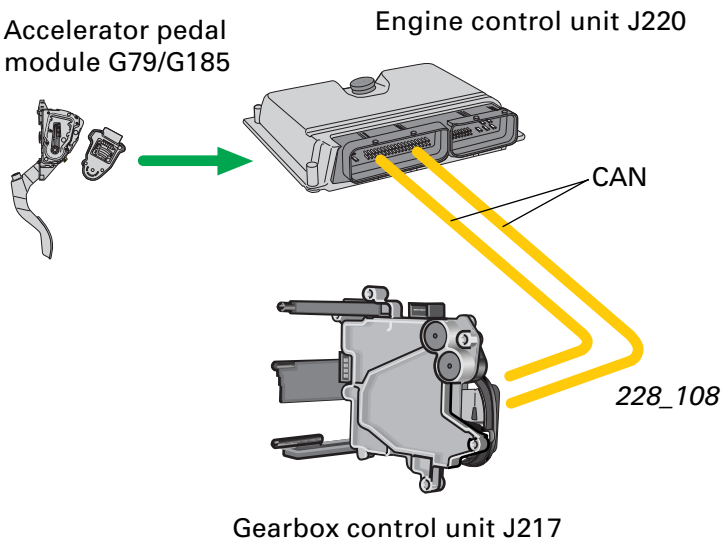

Tiptronic switch F189

Tiptronic switch F189 is integrated in the pcb of the gear change mechanism. It comprises 3 Hall sensors which are actuated by a magnet located on the shutter.

A - Sensor for downshift
B - Sensor for tiptronic recognition
C - Sensor for upshift

7 LEDs are located on the pcb: 1 for each selector lever position, 1 for the “Brake actuated” symbol, and 1 of each for the + and – symbols on the tiptronic gate.

Each selector lever position LED is controlled by a separate Hall sensor.

The switches of F189 apply earth (Low signal) to the gearbox control unit when actuated. If a fault occurs, the tiptronic function is disabled.

Fault indication: inverted

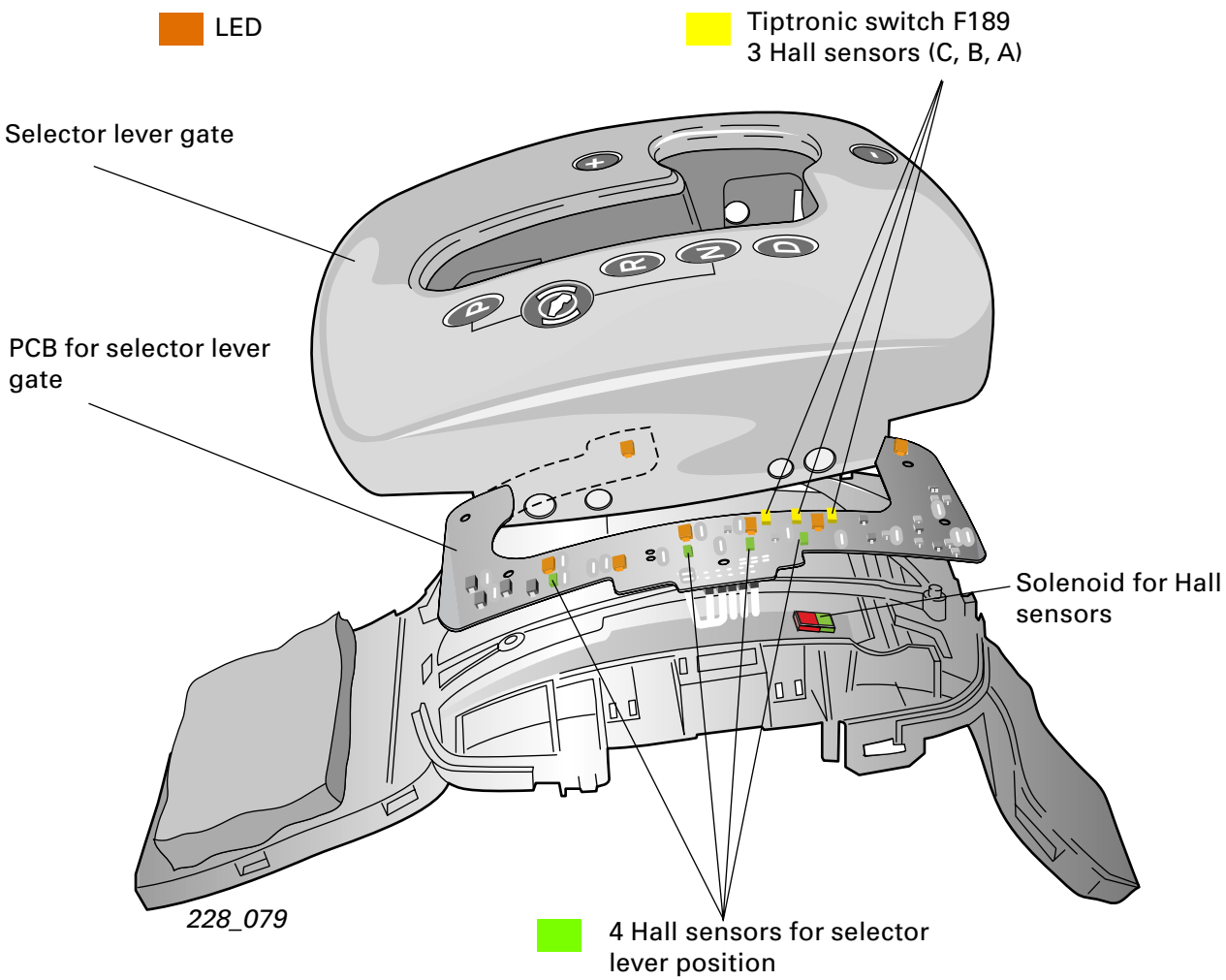

CAN information exchange on multitronic®

In the multitronic® information is exchanged between the gearbox control unit and the networked control units, apart from only a few interfaces, across the CAN bus (drivetrain CAN bus).

The system overview shows information which is supplied by the gearbox control unit across the CAN bus and received and used by the networked control units.

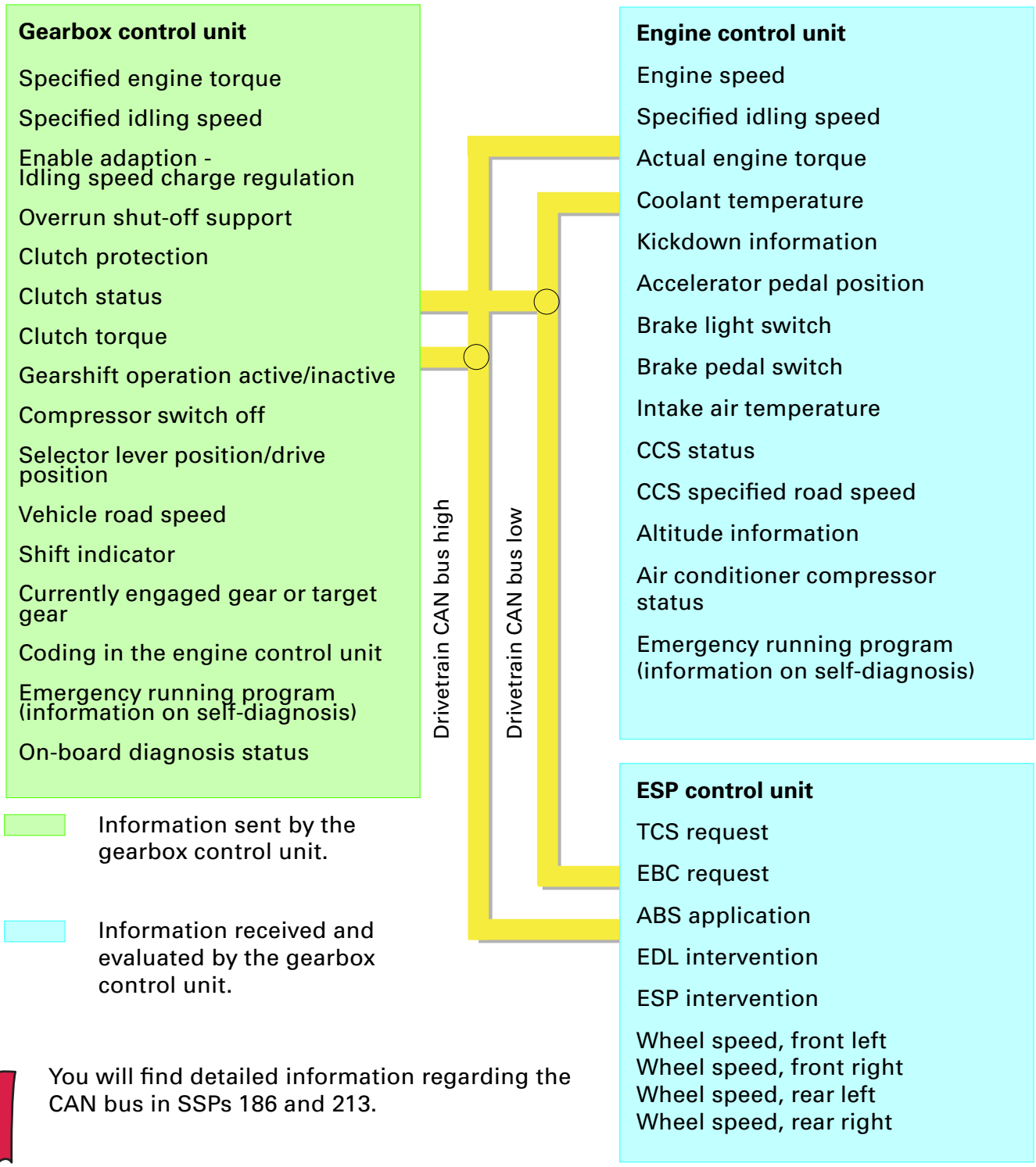

You will find detailed information regarding the CAN bus in SSPs 186 and 213.

Auxiliary signals/interface

The multitronic® provides in addition the following interfaces for information exchange by CAN bus:

Pin 15	Signal for engine speed
Pin 6	Signal for shift indicator
Pin 5	Signal for road speed
Pin 2	Diagnosis and programming interface
Pin 13	Signal for tiptronic (recognition)
Pin 12	Signal for tiptronic (downshift)
Pin 14	Signal for tiptronic (upshift)

Signal for engine speed

Engine speed is a key parameter for the multitronic®. To increase the reliability of the multitronic®, the information on engine speed is transmitted to the gearbox control unit via a separate interface and in addition (redundantly) across the CAN bus (see Function diagram).

In the event of faults or if the separate “engine speed signal” interface fails, the information on engine speed is adopted by the CAN bus as a substitute value.

In the event of faults at the “engine speed signal” interface, the micro-slip control function is deactivated.

For more detailed information regarding the engine speed signal, please refer to SSP 198.

Signal for shift indicator

The signal for shift indicator is a square-wave signal generated by the gearbox control unit with a constant high level (20 ms) and variable low level.

Each selector lever position or each “gear” (in the tiptronic function) is assigned to a defined low level.

The selector lever position indicator or the shift indicator in the dash panel insert recognises by the low-level duration what selector lever position or what gear is selected and indicates this accordingly.

Signal for shift indicator on multitronic® - P, R, N, D

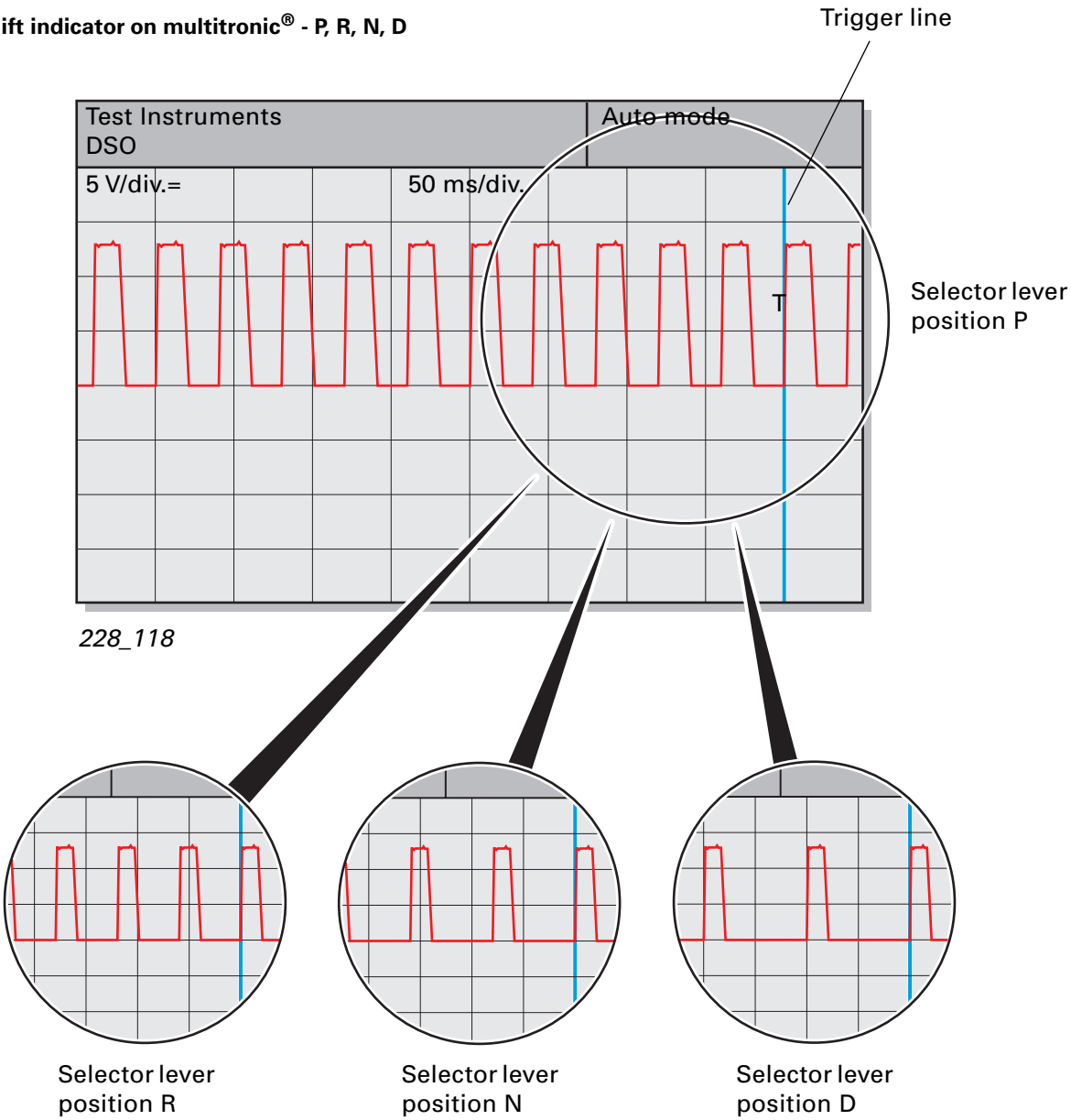

When the CAN bus is introduced into the dash panel insert (it is expected to be introduced into the Audi A6 in mid-2000), the “shift indicator” and “road speed” interfaces will no longer be necessary as their information will be transmitted across the CAN bus.

To simplify the representation, the signals from **all** six gears for the tiptronic function are shown combined in a **single** diagram.

Signal for shift indicator tiptronic - 1st, 2nd, 3rd, 4th, 5th and 6th gear

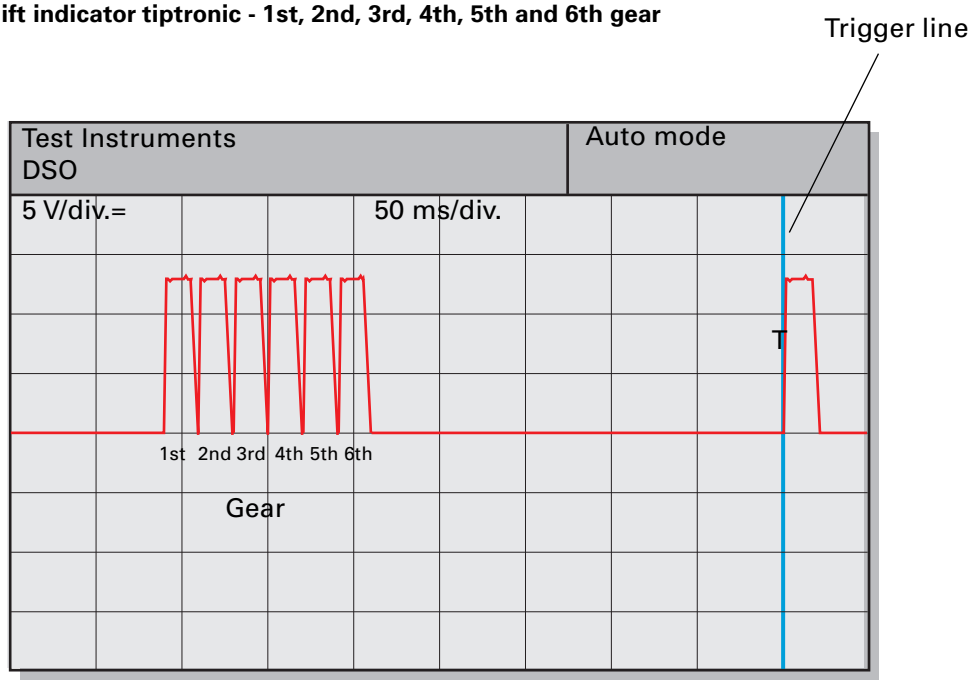

228_117

Signal for road speed

The signal for road speed is a square-wave signal generated by the gearbox control unit. The duty cycle is approx. 50% and the frequency changes synchronous to road speed.

8 signals are generated per wheel revolution and relayed to the dash panel insert through a separate interface.

The signal is used here for speedometer operation and is passed on to the networked control units/systems (e.g. engine, air conditioning system, audio system, etc.) by the dash panel insert.

Notes

Function diagram

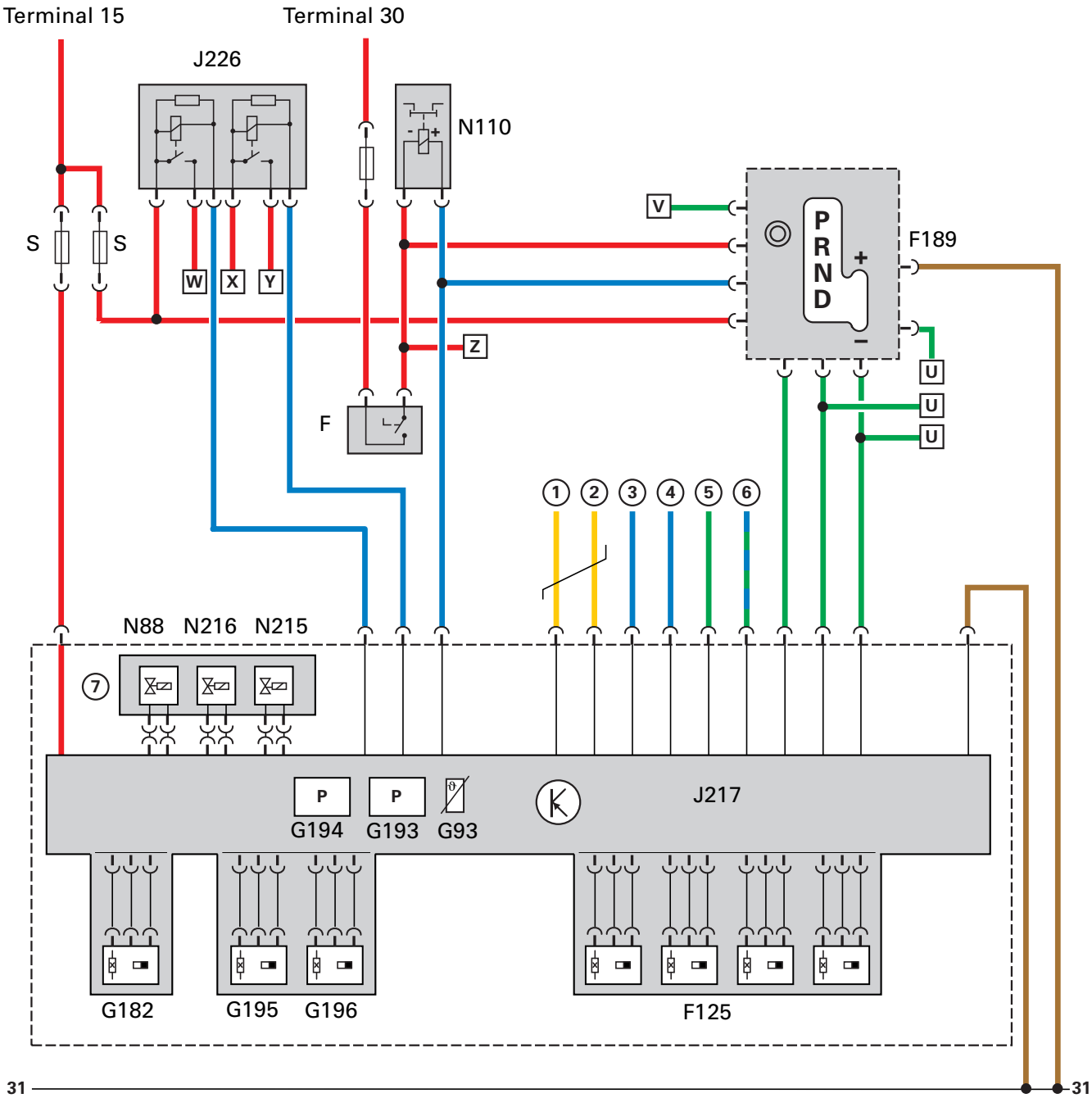

228_030

Components

F	Brake light switch
F125	Multi-functional switch
F189	Tiptronic switch
G93	Gearbox oil temperature sender
G182	Gearbox input speed sender
G193	Automatic gearbox hydraulic pressure sender -1- (clutch pressure)
G194	Automatic gearbox hydraulic pressure sender -2- (contact pressure)
G195	Gearbox output speed sender
G196	Gearbox output speed sender -2-
N88	Solenoid valve 1 (clutch cooling/ safety shut-off)
N110	Selector lever lock solenoid
N215	Automatic gearbox pressure control valve -1- (clutch control)
N216	Automatic gearbox pressure control valve -2- (transmission control)
J217	Control unit for multitronic
J226	Starter inhibitor and reversing light relay
S	Fuses

Connections and auxiliary signals

U	To tiptronic steering wheel (option)
V	From terminal 58d
W	To the reversing lights
X	From ignition switch terminal 50
Y	To starter terminal 50
Z	To the brake lights
1	Drivetrain CAN bus Low
2	Drivetrain CAN bus High
3	Signal for shift indicator
4	Signal for road speed
5	Signal for engine speed
6	K-diagnostic connection

Colour codes

= Input signal

= Output signal

= Positive

= Earth

= Bidirectional

= Drivetrain CAN bus

– · — · — · – multitronic®

(7) Fitted in the hydraulic control unit

Due to the fact there are only a few interfaces to the gearbox control unit, the multitronic® does without a separate cable set.
The wiring is integrated in the engine cable set.

Dynamic control program (DRP)

The multitronic® control unit has a dynamic control program (DRP) for calculating the target gearbox input speed.

It is a further development of the dynamic shift program DSP already being used in the CVT.

The object of the DRP is to set the gear ratio such that handling performance matches the driver input as closely as possible. The driving feel should be like driving in manual mode.

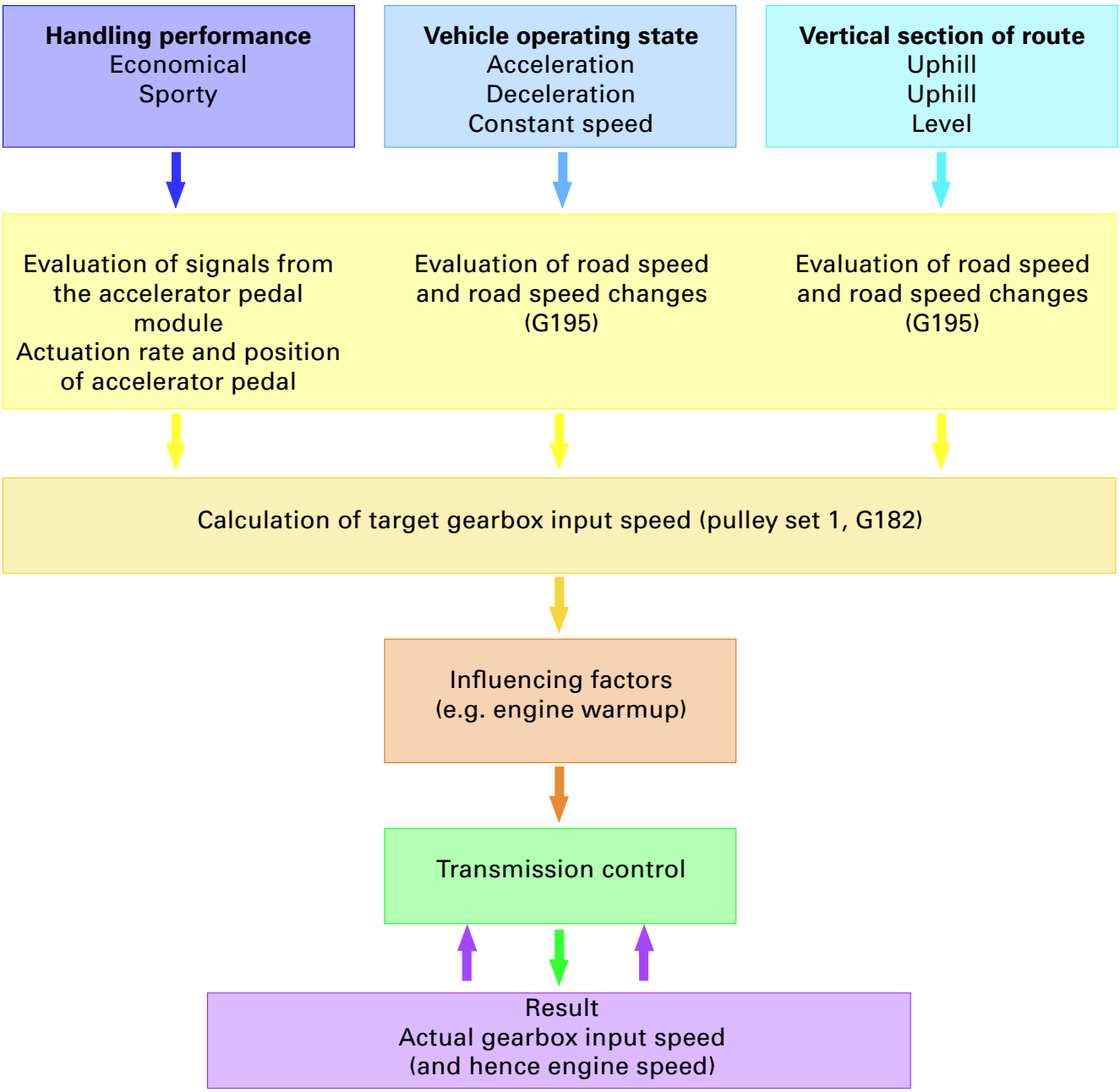

For this purpose the system determines the driver's behaviour, the vehicle operating state and the vertical section of the route so it can provide the optimum gear ratio in any driving situation.

The gearbox control unit evaluates the actuation rate and angular position of the accelerator pedal (driver evaluation), as well as the road speed and vehicle acceleration (vehicle operating state, vertical section of route).

Using this information and logical combinations thereof the target gearbox input speed level is set to between the most economical characteristic and the most sporty characteristic within the defined RPM limits by varying the transmission ratio so as to account for the vertical section of the route and so that the match between handling performance and driver input is as close as possible.

The logical combinations and calculations (control strategy/control philosophy) are defined by the software and cannot account for every eventuality. Therefore, there are still situations in which manual intervention using the tiptronic function is expedient.

Handling performance
Economical
Sporty

Vehicle operating state
Acceleration
Deceleration
Constant speed

Vertical section of route
Uphill
Uphill
Level

The control strategy can vary by model, displacement and control unit variant.

DRP control strategy

The control strategy during typical driving situations is shown by means of the following examples.

Fig. 228_119 shows the speed characteristics when accelerating at full throttle with the kickdown activated.

By activating the kickdown, the driver signals to the gearbox control unit that maximum acceleration is required.

To achieve this, the engine's maximum power output must be provided quickly. For this purpose engine speed is adjusted for maximum performance and maintained until the accelerator pedal angle is reduced.

Although the driver will be required to adjust to this unusual behaviour, it makes it possible for the vehicle to accelerate with the maximum possible dynamism. In addition the vehicle's top speed as a function of tractional resistance is kept at the maximum possible value.

The fact that the engine speed increases quickly but the engine does not accelerate to the same extent results in what is known as the “rubber band effect” or what feels like a “slipping clutch”. This effect is alleviated by “intercepting” the increase in engine speed shortly before maximum engine speed is attained.

Kickdown acceleration

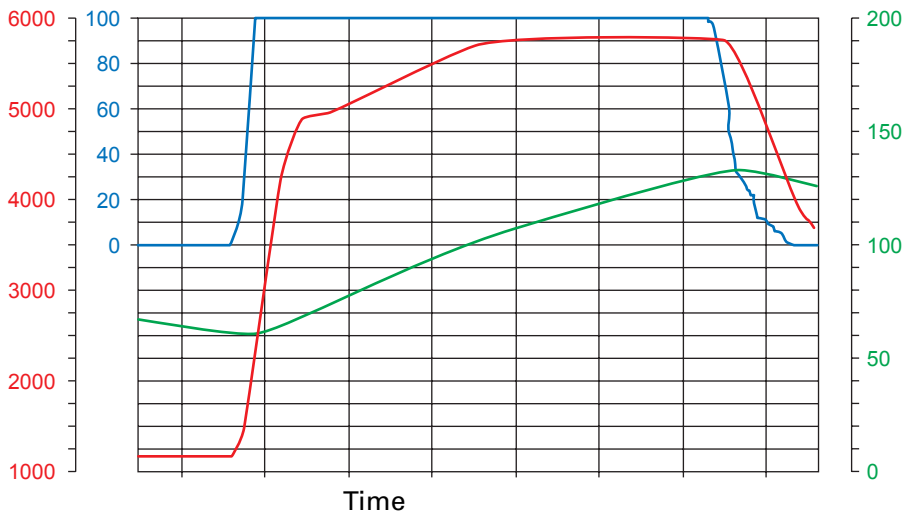

228_119

Engine speed RPM

Accelerator pedal position in%

Road speed in kph

To contain this effect, “normal” acceleration at full throttle (without kickdown), as well as acceleration with lesser accelerator pedal angles, are characterised by the speed characteristics shown in Fig. 228_124 and Fig. 228_122.

The “engine speed tracking” function is used for this purpose. Engine speed and RPM level are regulated depending on the position or actuation rate of the accelerator pedal in such a way that engine speed increases directly proportional to road speed.
This control strategy simulates the handling performance of multi-step gearboxes and closely matches the driving feel which the driver is accustomed to. In keeping with driving style, the rpm level is high (sporty) at large accelerator pedal angles and low (economical) at small accelerator pedal angles.

Full throttle acceleration

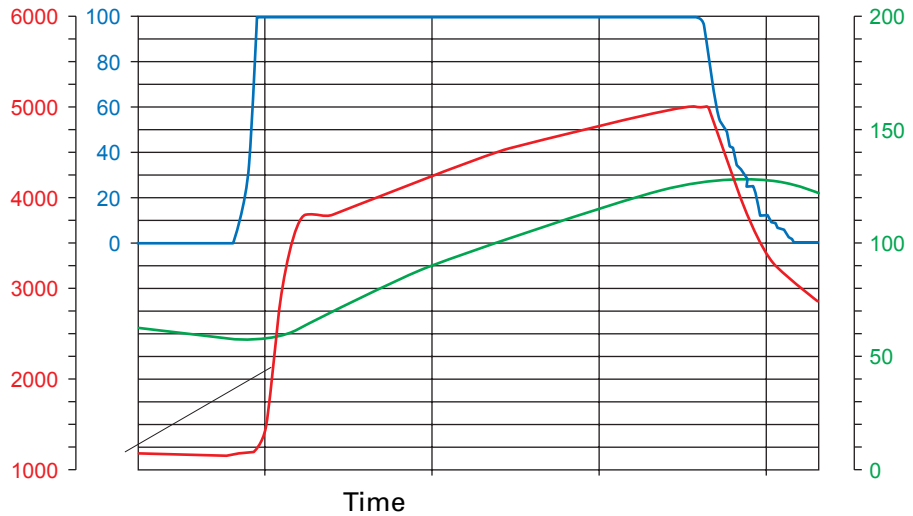

228_124

Part throttle acceleration, throttle 80% open

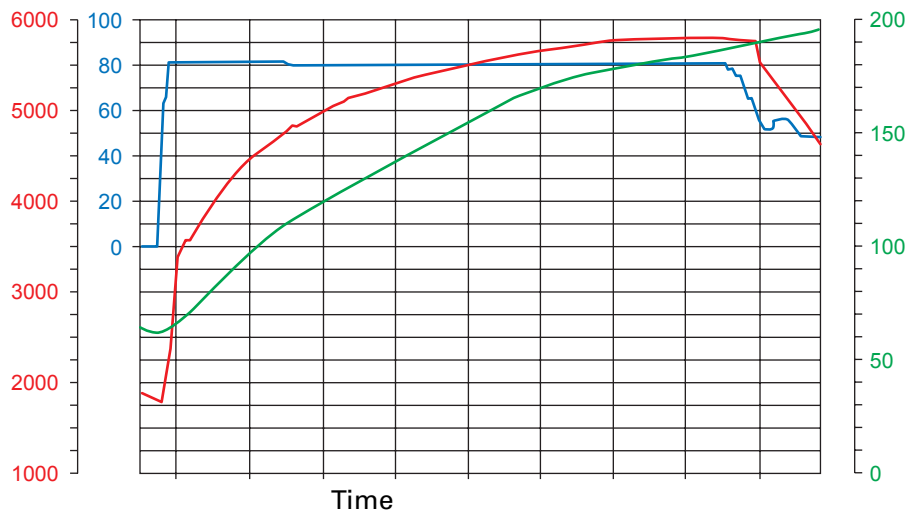

228_122

Engine speed RPM

Road speed in kph

Accelerator pedal position in%

As shown in Fig. 228_123, quick changes in accelerator pedal position are converted to instantaneous changes in speed in order to meet the driver's demands on performance or acceleration.

If the driver adopts an economical driving mode, as characterised by small accelerator pedal angles and a slow rate of opening of the throttle, then road speed is increased on the lowest rpm level (see Fig. 228_121).

Engine speed response to quick changes in accelerator pedal angle

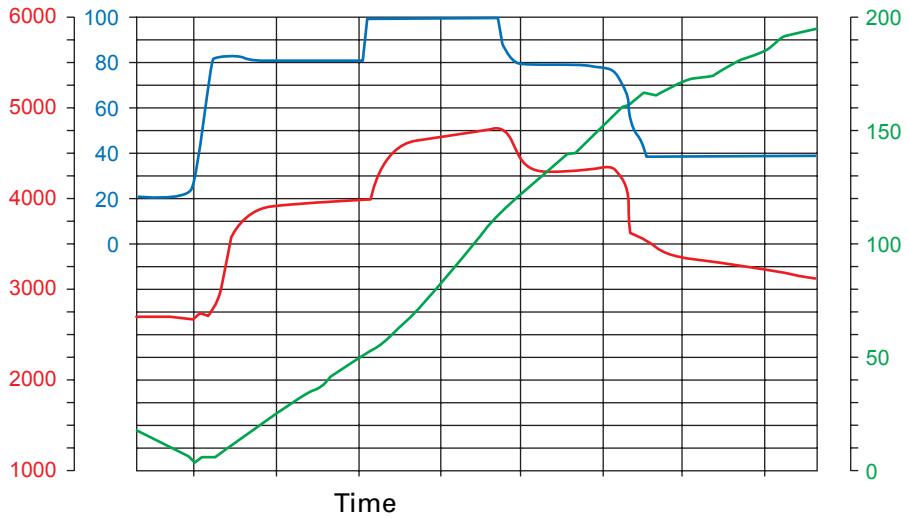

228_123

Acceleration in an economical driving mode

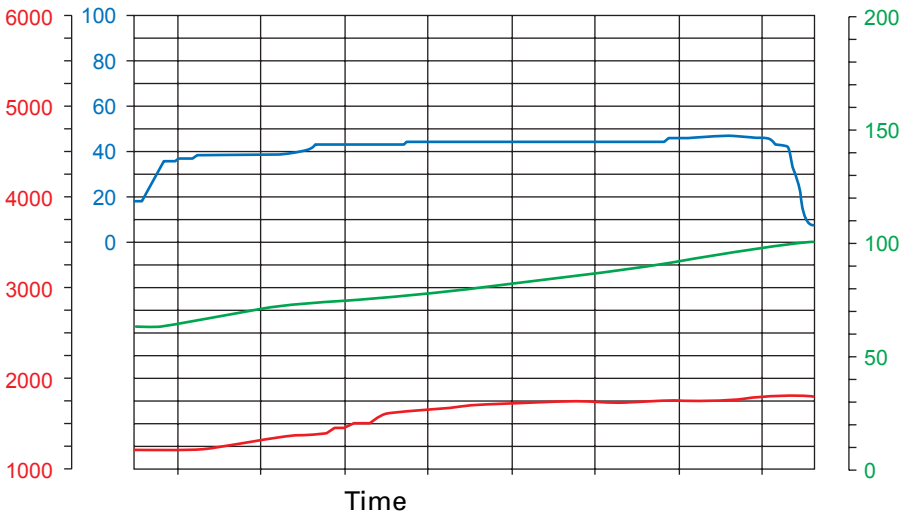

228_121

Engine speed RPM

Accelerator pedal position in%

Road speed in kph

In general the system responds to a reduction in the accelerator pedal angle by reducing the rpm level as shown in Fig. 228_120 and Fig. 228_123.

If the accelerator is suddenly released, particularly in a sporty driving mode, the engine speed is “held” at a higher level for longer.

By increasing the braking effect of the engine (high overrun speed), this control strategy helps to brake the vehicle and increases engine dynamism for instant accelerator response.
In addition, unnecessary transmission ratio adjustments are suppressed.

Acceleration with reduced accelerator pedal angle

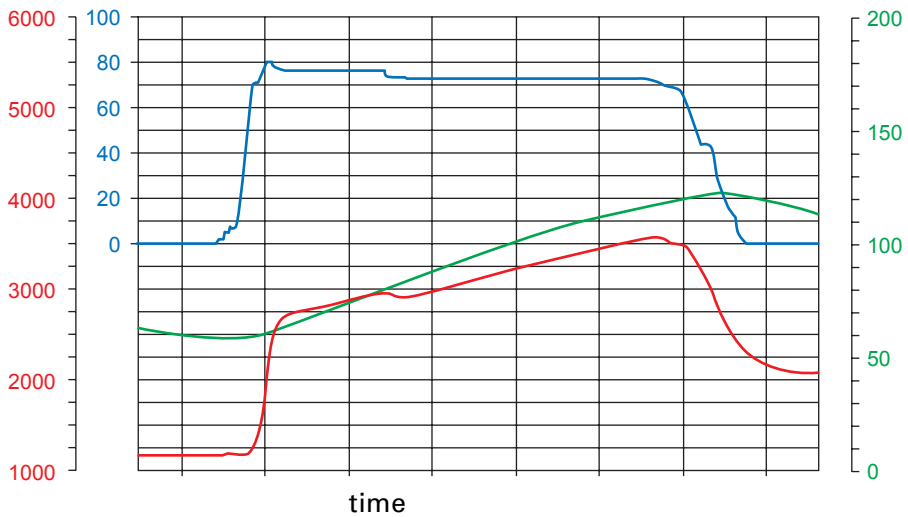

228_120

Engine speed RPM

Accelerator pedal position in%

Road speed in kph

Motion resistance

"Power in relation to load" is calculated in order to detect motion resistance (uphill gradient, downhill gradient, vehicle operation with trailer in tow).

It indicates whether power demand is higher or lower compared to the tractional resistance during vehicle operation on a level surface (unladen).

$P_{Engine\ load}$ = Power in relation to load
P_{mot} = Actual engine output
P_a = Acceleration work
P_{FW} = Power in relation to motion resistance

$$P_{Engine\ load} = P_{mot} - P_a - P_{FW}$$

Uphill gradient

Higher power demand may be due to an uphill gradient or a trailer.

In this case, the engine speed and output level must be increased through a shorter ratio without the driver constantly having to open the throttle more as shown in Fig. 228_091.
In practice the driver will perceive this control strategy, known as "load compensation", as a comfort increase.

Increase in engine speed on a downhill gradient

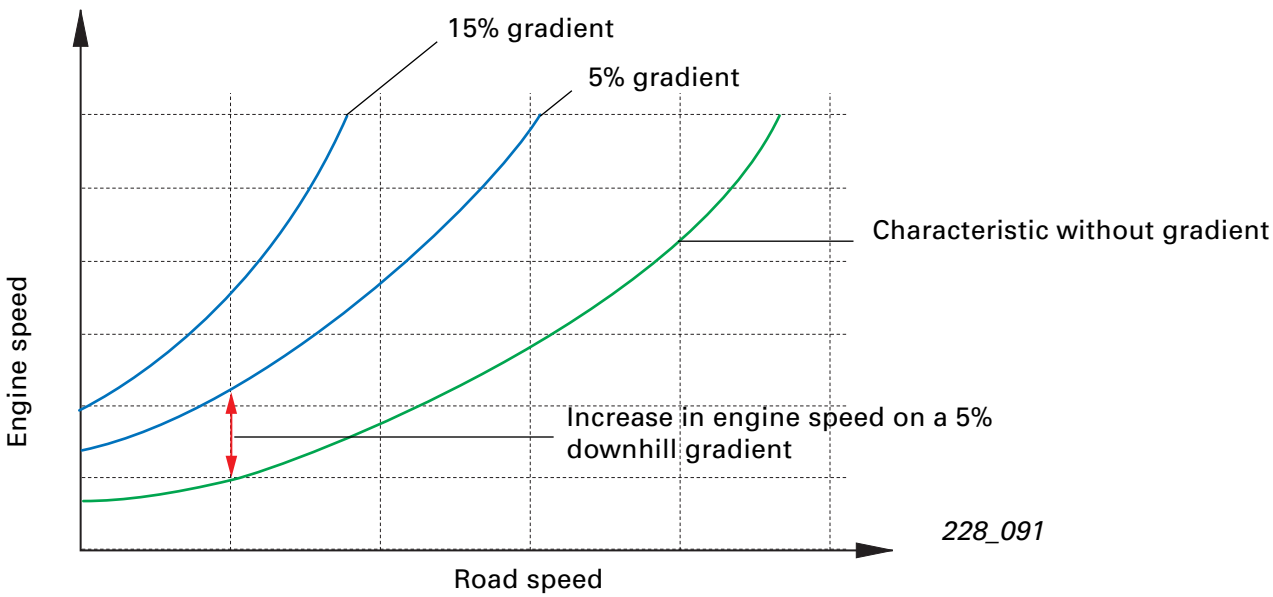

Driving downhill

On a downhill gradient the situation is slightly different. If the driver wants to be assisted by engine brake effect when driving downhill, he must indicate this by pressing the brake pedal (signal from switch F/F47).

If the engine is in the overrun phase and road speed increases even though the brake pedal is pressed, the transmission ratio is adjusted towards Underdrive and with it the engine braking moment is increased.

By pressing the brake pedal several times (without reduction in road speed), the gearbox control unit gradually adjusts the transmission ratio towards Underdrive (see Fig. 228_097). Thus the driver has a great deal of control over the intensity of the engine brake effect.

If the downhill gradient decreases, the transmission ratio is again adjusted towards Overdrive and the vehicle's road speed increases slightly.

If the driver enters a downhill gradient pressing the brake pedal (and holds the brake pedal down), the “downhill function” as described will not be active initially. If the road speed is kept almost kept constant in this case by applying the brake, the multitronic® will be unable to recognise the driver's intentions and therefore cannot assist the driver by increasing the engine brake effect.
However, if the vehicle exceeds a defined rate of acceleration, the “downhill function” will be activated automatically.

Engine braking moment can be controlled individually by using the tiptronic function.

Increase in engine speed when driving downhill

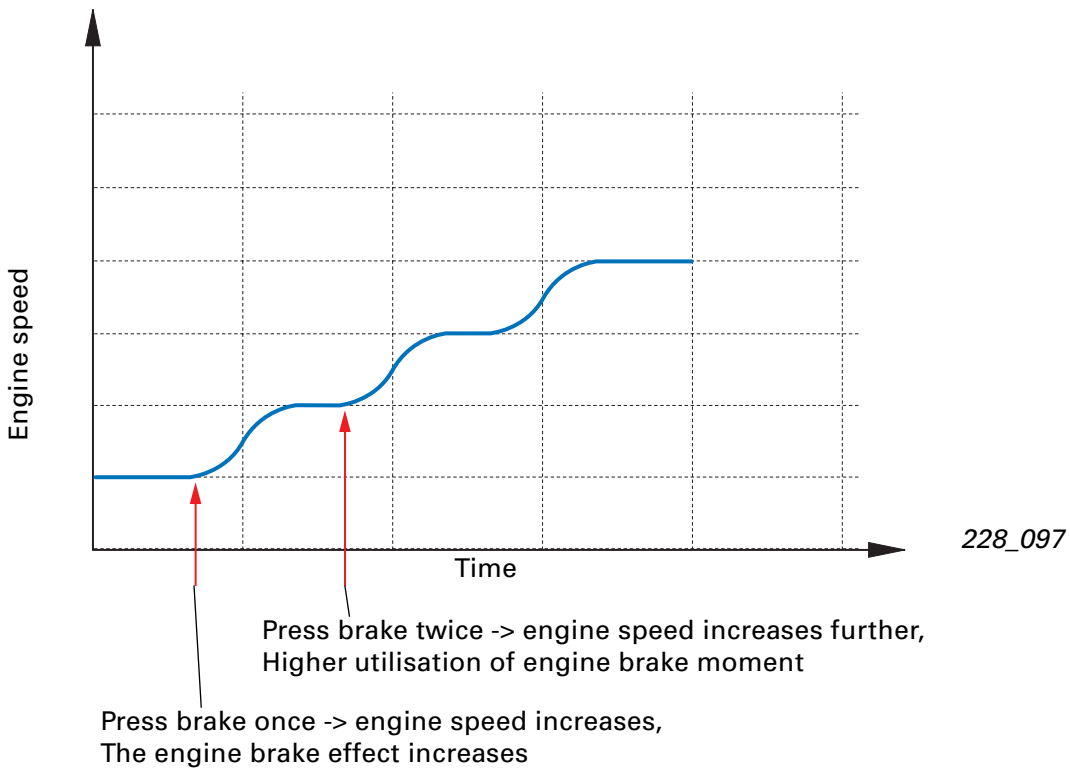

Driving with CCS

In overrun mode, the engine brake effect is insufficient when driving downhill with the cruise control system (CCS) switched on because the transmission ratio is often low. In this case, the engine brake effect is increased by raising the target gearbox input speed (transmission control is adjusted towards Underdrive).
The set road speed is always slightly higher than the set road speed. This is due to the control tolerance of the CCS and the safety requirement which stipulates that the engine must be in overrun mode.

A maximum overrun speed which serves as a limit value for gearbox input speed control is stored in the gearbox control unit. When the maximum overrun speed is reached, the transmission ratio is not adjusted further towards Underdrive and therefore is limited.

If the engine brake effect is insufficient at maximum overrun speed, the vehicle's road speed increases and the driver has to apply the brakes.

The tiptronic function

As mentioned previously, 6 “gears” can be selected manually in tiptronic mode. In this mode, defined transmission ratios are set and “gears” are simulated (see also Page 6).

The handling performance and shift strategies are identical to the multi-step gearbox with tiptronic (mandatory upshift or mandatory downshift).

If the tiptronic function is selected while driving, the momentary transmission ratio is initially put on hold. The defined transmission ratios are set step by step by shifting up or down.

Reason:

As the transmission ratio may possibly be between two “gears” at the point of change-over to tiptronic mode, an immediate change into a defined ratio would lead to a greater or lesser change in road speed depending on the differential to the next gear.

Towing

To make towing possible, design measures have been implemented in the variator (see "The variator" for details).

When towing a vehicle with multitronic®, the following conditions must be fulfilled:

- ► The selector lever must in the "N" position.
- ► **The vehicle's road speed must not exceed 50 kph.**
- ► Trailers must not be towed further than 50 km.

When towing the vehicle, the oil pump is not driven and rotating parts are not lubricated.

Care should therefore be taken in meeting the above-specified conditions since gearbox may otherwise be damaged severely.

It is **not** possible to jump-start the vehicle by towing (e.g. battery too weak).

Update programming (flash programming)

Integrating the gearbox control unit in the gearbox (local electronics) made it possible for the first time to update the software without having to replace the control unit.

The control unit requires programs, characteristics and data (software) for the output signal calculations. These calculations are permanently stored in a so-called EEPROM (electronically programmable memory) and are available to the control unit at all times.

The EEPROM previously could not be programmed in the as-installed condition.

In the event of complaints which could be rectified by making modifications to the software, the control unit had to be replaced.

The multitronic® control unit has a so-called "flash EEPROM".

A flash EEPROM can be reprogrammed in the as-installed condition. This procedure is known as
"flash programming" or
"update programming".

A prerequisite for flash programming is the Diagnostic Testing and Information System VAS 5051 with the new software version (Update CD 12) and an up-to-date flash CD.

Programming is performed through the diagnostic interface (K-wire).

The introduction of flash programming in the multitronic® will see the advent of further systems with programmable control units.

Flash programming is only necessary when complaints can be rectified by software modification.

Explanatory notes

"in a flash" means "immediately".

In a programming context, "flash" stands for "quick programming".

The word "flash" is also used in many terms which are related to flash programming (e.g. flash CD).

"Update" means "to bring into line with latest status".

Sequence of operations - flash programming

After inserting the current flash CD and subsequently accessing the diagnosis mode of the multitronic® (Address word 02 - Gearbox electronics), the VAS 5051 identifies whether the control unit is programmable by the control unit ID.

Using the data on the flash CD, VAS 5051 determines whether a new software version exists for the part No. of the gearbox control unit.

If this is the case, “Update programming” appears in the selection of diagnostic functions. After selecting the diagnostic function “Update Programming”, the programming procedure is started.

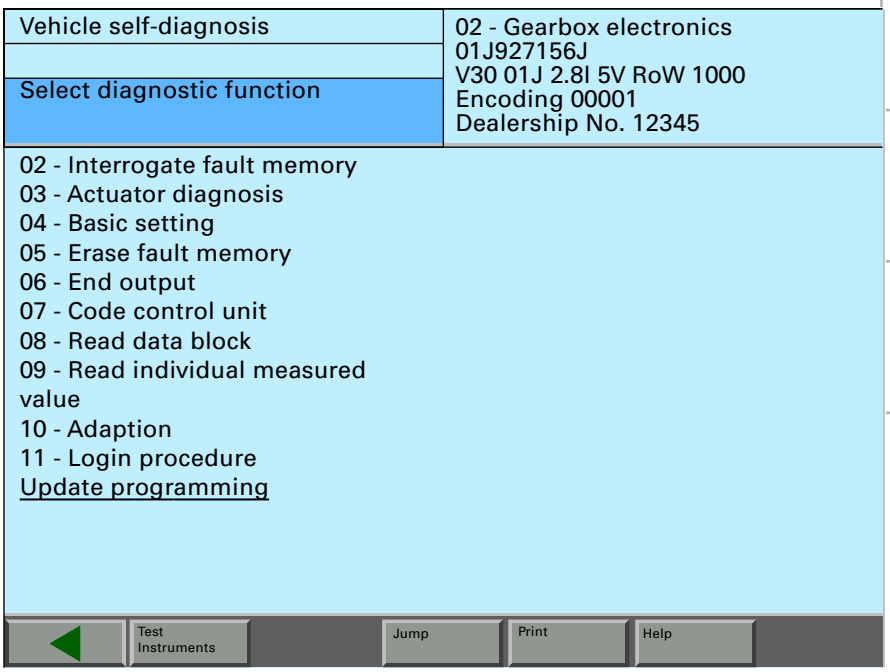

228_086

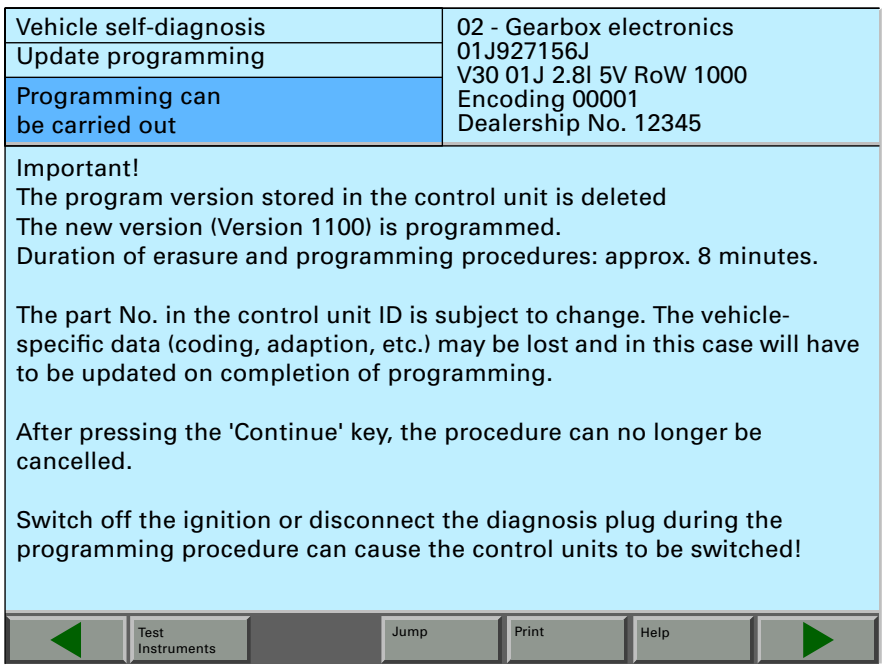

228_087

The programming procedure is controlled by the flash CD and runs automatically.

The progamming sequence can be tracked on the display, which shows information on the steps in progress and prompts. The programming procedure takes approx. 5 - 10 minutes.

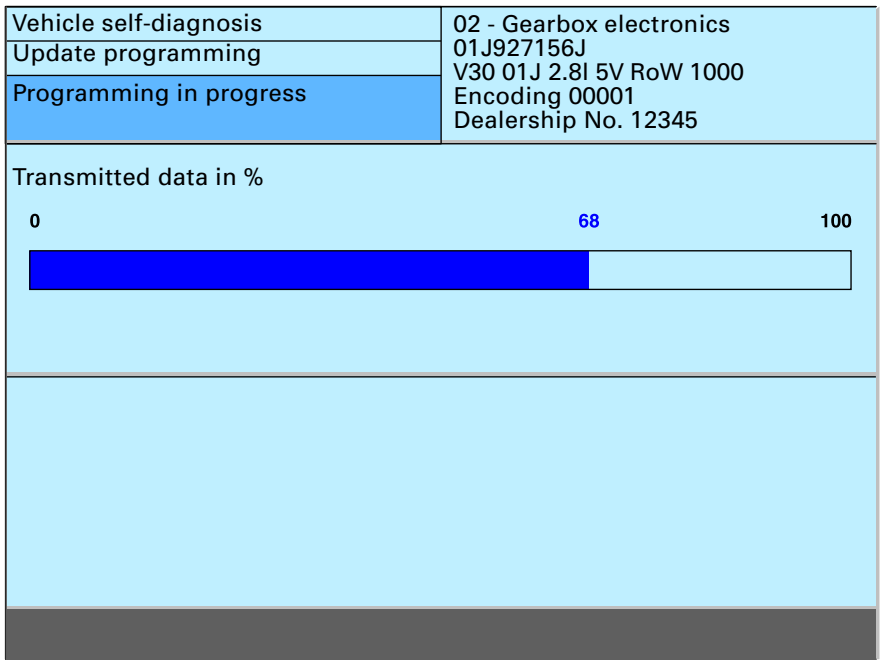

228_088

Once the programming procedure has been completed, a programming log is displayed.

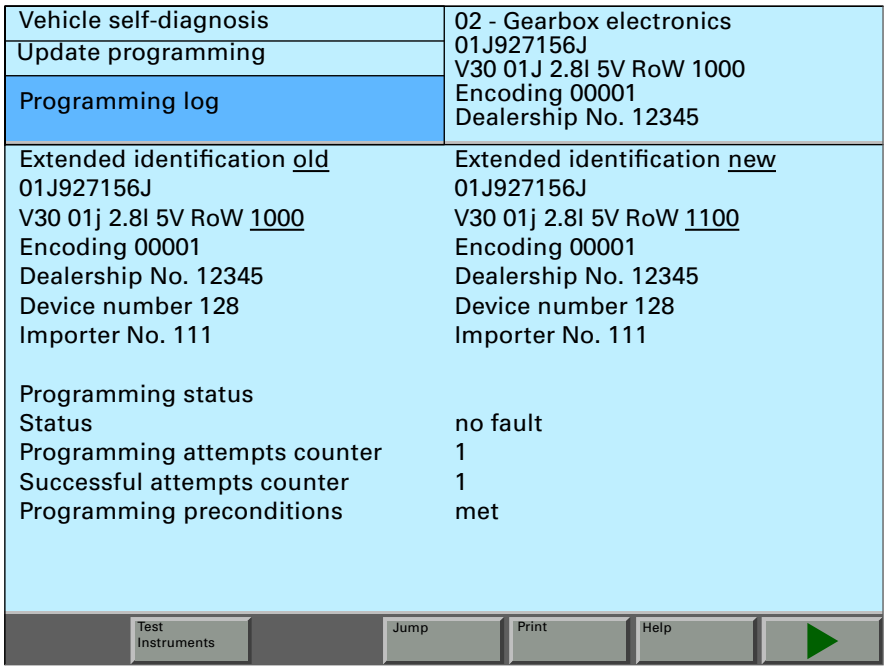

228_089

CAN data exchange is interrupted during the programming procedure, which leads to erroneous entries in the fault memories of CAN-networked control units.

On completion of programming, the fault memories of **all** control units must be erased.

Only new software versions can be programmed. “Reverse-progamming” is not possible.

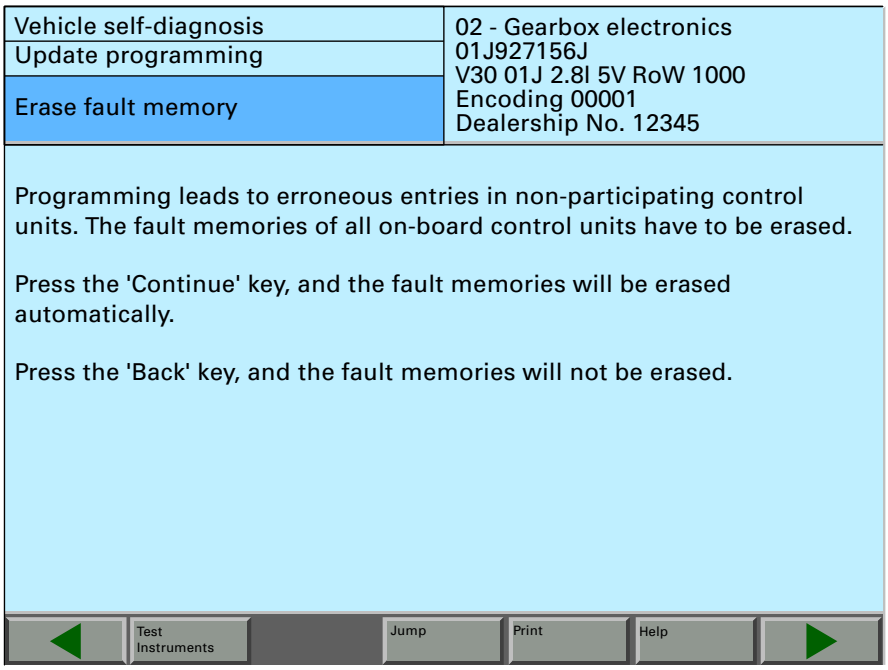

228_087

The flash CD

The flash CD contains the data and programs for the progamming procedure and the “update versions” of new software.

An update of the flash CD is released at certain intervals. The flash CD also contains update data for other programmable control units (future systems). This means, there will only be **one** flash CD for **all** systems (engine, gearbox, brake, air conditioning system, etc.) in future.

Flash CDs are only supplied when new software versions are available.

228_096

Special tools/workshop equipment

The following special tools/workshop facilities will initially be required by the Service Department.

Gearbox towbar

T40013

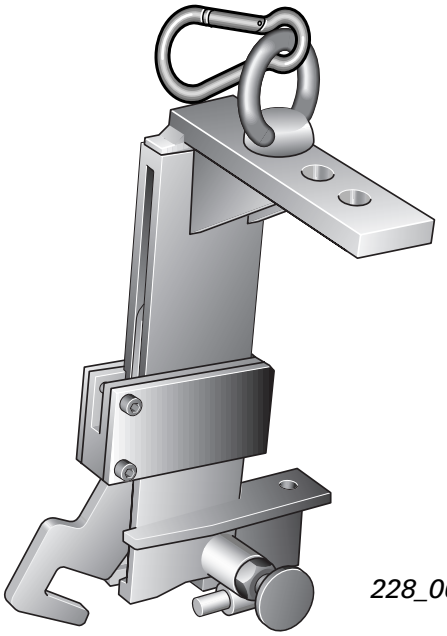

228_066

Oil seal extractor

T40014

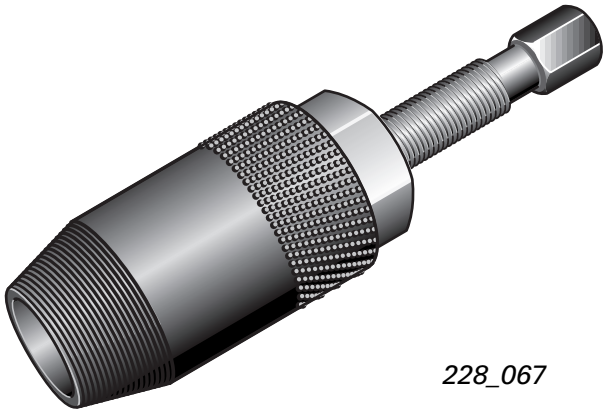

228_067

Test box

V.A.G 1598/21

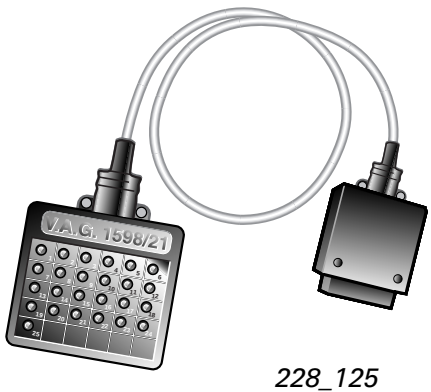

228_125

Pressure piece

T40015

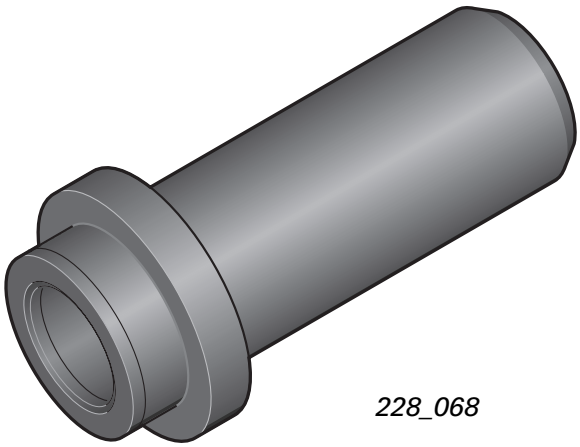

228_068

Adjustment plate

3282/30

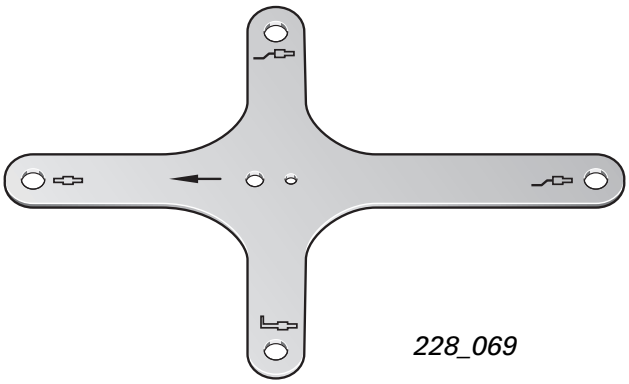

228_069

ATF filler system

VAS 5162

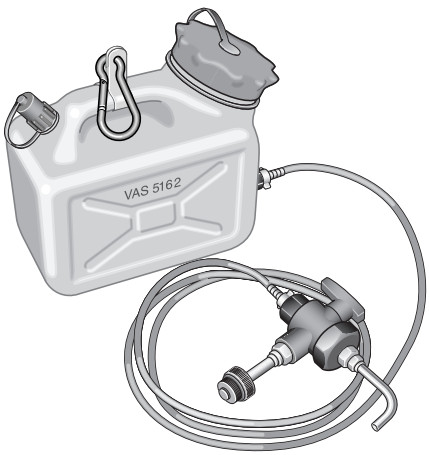

228_070

Notes

All rights reserved. Technical specifications subject to change without notice.
AUDI AG
Dept. I/VK-5
D-85045 Ingolstadt
Fax +49 (0)841/89-36367
940.2810.47.20
Technical status: 09/99
Printed in Germany