1991 BRONCO / F150-F350 F-SUPER DUTY

DEMO

This DEMO contains only a few pages of the entire manual/product.

Not all Bookmarks work on the Demo, but they do on the full version.

Features:
- Searchable text
- Printable pages
- Bookmarked for easy navigation
- High Resolution images
- Zoom to see exact details
- Money back Guarantee
- Available on USB and eBook download

Electrical & Vacuum Trouble-Shooting Manual

License #84356800

Copyright © 2023, Forel Publishing Company, LLC, Woodbridge, Virginia

All Rights Reserved. No part of this book may be used or reproduced in any manner whatsoever without written permission of Forel Publishing Company, LLC. For information write to Forel Publishing Company, LLC, Woodbridge, VA 22192

1991 Bronco/F150-F350/F-Super Duty Electrical & Vacuum Trouble-Shooting Manual (EVTM)

EAN: 978-1-60371-414-3
ISBN: 1-60371-414-6

Forel Publishing Company, LLC
Woodbridge, VA 22192
Email: sales@ForelPublishing.com
https://www.ForelPublishing.com

Official Licensed Product
License #84356800

This publication contains material that is reproduced and distributed under a license from Ford Motor Company. No further reproduction or distribution of the Ford Motor Company material is allowed without the express written permission of Ford Motor Company.

Note from the Publisher

This product was created from the original Ford Motor Company's publication. Every effort has been made to use the original scanned images, however, due to the condition of the material; some pages have been modified to remove imperfections.

Disclaimer

Although every effort was made to ensure the accuracy of this book, no representations or warranties of any kind are made concerning the accuracy, completeness or suitability of the information, either expressed or implied. As a result, the information contained within this book should be used as general information only. The author and Forel Publishing Company, LLC shall have neither liability nor responsibility to any person or entity with respect to any loss or damage caused, or alleged to be caused, directly or indirectly by the information contained in this book. Further, the publisher and author are not engaged in rendering legal or other professional services. If legal, mechanical, electrical, or other expert assistance is required, the services of a competent professional should be sought.

ELECTRICAL AND VACUUM TROUBLESHOOTING MANUAL
ART-12129-91

FORD PARTS and SERVICE DIVISION

Quality is Job 1

Ford Parts and Service Division has developed a new format for the EVTM for the 1991 Thunderbird/Cougar. Our goal is to provide accurate and timely electrical and vacuum service information.

1991 EVTM FEATURES

- **"HOW THE CIRCUIT WORKS"** descriptions that explain how each circuit works. These descriptions are designed to be used in conjunction with the Electrical Schematic.
- **Component Location** information, within each system, that tells where each component is located on the vehicle as well as a reference to a **"COMPONENT LOCATION VIEW."**
- **"COMPONENT TESTING"** procedures (CELL 149) that tell the user how to perform diagnostic tests on various circuits.
- **Connector End Views** (**"COMPONENT CONNECTOR FACES"** CELL 150) are shown for connectors with five or more cavities; and for connectors with ten or more cavities, a circuit function chart is provided.
- **NOTES, CAUTIONS and WARNINGS** that contain important safety information.
- Full view **"COMPONENT LOCATION VIEWS"** (CELL 151) to help locate on-vehicle components.
- **Component Base Part Numbers** and **Harness Base Part Numbers** to aid in ordering parts.
- **Cellular Pagination:** A specific section (or cell) in all EVTMs is numbered by cell and starts with page 1. For example: **"HOW TO FIND ELECTRICAL CONCERNS"** is CELL 5 and begins with page 5-1.
- **"C"** numbers have been assigned for all electrical connectors. **"C"** numbers are listed with the system cell, and all are listed in numerical order in the **"LOCATION INDEX"** (CELL 152).
- **"We Want To Hear From You"** – A feedback sheet is provided on the last page.

ORDERING INFORMATION

Information about how to order additional copies of this publication or other Ford publications may be obtained by writing to Helm Incorporated at the address shown below or by calling 1-800-782-4356. Other publications available include:

- Shop Manuals
- Service Specification Books
- Car/Truck Wiring Diagrams
- Engine/Emissions Diagnosis Manuals

Helm Incorporated
P.O. Box 87150
Detroit, Michigan 48207

1-1 TABLE OF CONTENTS/INDEX

Table Of Contents

How to Use This Manual **2-1**
Helpful Reminders **3-1**
Electrical Symbols **4-1**
How to Find the Electrical Concern .. **5-1**
Grounds **10-1**
Circuit Protection/Fuse Panel **11-1**
Charging System **12-1**
Power Distribution **13-1**
Starting System **20-1**
Ignition System **21-1**
Electronic Engine Control (4.9L EFI) **23-1**
Electronic Engine Control (5.0L and 5.8L EFI) **24-1**
Electronic Engine Control (7.5L EFI) **25-1**
Glow Plug Control **26-1**
E4OD Transmission (Diesel) **29-1**
E4OD Transmission (Gasoline) **30-1**
Speed Control **31-1**
Cooling Fan **33-1**
All Wheel Drive **34-1**
Anti-Lock Brakes **42-1**
Horn/Cigar Lighter **44-1**
Fuel Tank Selector **49-1**
Heater **53-1**
Air Conditioner/Heater **54-1**
Rear Window Defrost **56-1**
Instrument Cluster (4 Gauge) **60-1**
Instrument Cluster (5 Gauge) **61-1**
Vehicle Speed Sensor (VSS) **64-1**
Warning Indicators **65-1**
Warning Chime **66-1**
Instrument Illumination **71-1**
Windshield Wiper/Washer **80-1**
Interval Wiper/Washer **81-1**
Headlamps **85-1**
Courtesy Lamps **89-1**
Turn/Stop/Hazard Lamps **90-1**
Exterior Lamps **92-1**
Backup Lamps **93-1**
Trailer Adapter **95-1**
Daytime Running Lamps **97-1**
Power Windows **100-1**
Power Door Locks **110-1**
Radio **130-1**
Vacuum Symbols **140-1**
How to Find Vacuum Concern **141-1**
Vacuum Distribution **142-1**
Component Testing **149-1**
Connector Faces **150-1**
Component Location Views **151-1**
Location Index **152-1**
Vehicle Repair Location Codes **160-1**

Index

All Wheel Drive 34-1
Anti-lock Brakes 42-1
A/C-Heater
  Vacuum 54-1
  Electrical 54-2
Charging System 12-1
Cigar Lighter 44-1
Circuit Protection/Fuse Panel 11-1
Component Testing
  A/C Function Selector Switch 149-7
  Backup/Neutral Safety Switch 149-12
  Blower Switch 149-8
  Heater Function Selector Switch 149-9
  Ignition Switch 149-2
  Interval Wiper/Washer Switch 149-6
  Introduction 149-1
  Main Light Switch 149-1
  Manual Lever Position Switch 149-11
  Multi-Function Switch 149-3, 149-4
  Tank Selector Valve 149-10
  Wiper/Washer Switch 149-5
Connector Faces/Pinout Charts 150-1
Courtesy Lamps 89-1
Electronic Engine Control
  4.9L 23-1
  5.0L & 5.8L 24-1
  7.5L 25-1
E4OD Transmission 30-1
Fuel Tank Selector
  Diesel 49-1
  Gas 49-2
Fuse Panel
  Diesel 12-5
  Gas 12-3
    Fuse 4 12-12
    Fuse 5 ..... 12-9, 12-10
    Fuse 8 12-12
    Fuse 10 12-6
    C.B.12 12-11
    Fuse 11 12-12
    Fuse 18 ..... 12-7, 12-8
Gauges
  Coolant Temperature ... 60-1, 61-1, 61-2
  Fuel
    Diesel 61–2
    Gas 60–1, 61-1
  Oil Pressure
    Diesel 61–2
    Gas 60–1, 61-1
  Tachometer
    Diesel 61–2
    Gas 61–1
  Voltmeter
    Diesel 61–2
    Gas 60–1, 61-1
Glow Plug Control 26-1
Grounds
  G100
    4.9L, 5.0L, 5.8L 10-1

7.3L 10-3
7.5L 10-5
G101
4.9L, 5.0L, 5.8L 10-2
7.3L 10-4
7.5L 10-6
G102 10-4
G201 10-10
G401 10-9
Headlamps 85-1
Heater 53-1
Horn 44-1
Ignition Switch 20-2
Diesel 12-5
Gas 12-3
Ignition System 21-1
Indicators
4 x 4 ..... 60-2, 61-3
Anti-lock 42-1, 60-2, 61-3
Brake Warning
Diesel 65-1
Gas 60–2, 61-3
Charge 12-1, 12-2
Check Engine 60-2, 61-3
Engine Warning 61-2
Fasten Seat Belt 60-3, 61-4
High Beam 85-1, 85-2
Low Range 60-2, 61-3
Plugged Fuel Filter 61-2, 65-1
Turn
Left 60-3, 61-4, 90-1
Right 60-3, 61-4, 90-1
Wait to Start 65-1
Water-in-fuel 65-1
Instrument Cluster
4 Gauge 60-1
5 Gauge 61-1
Instrument Illumination 71-1
Lamps (Exterior)
Backup 93-1, 93-2
Daytime Running Lamps 97-1
Hazard 90-1
License
F-Series 92-1
Bronco I 92-2
Marker 92-1, 92-3
Park
F-Series 92-1
Bronco I 92-2
Stop 90-1
Turn
Front 92-1
Rear 92-2, 90-3
Lamps (Interior)
Cargo/Dome
F-Series 89-1
Bronco I 89-2
Courtesy Lamps
F-Series 89-1
Bronco I 89-2, 89-3
Leece and Neville Alternator 13-1
Main Light Switch 12-12
Power Distribution 13-1
Power Door Locks 110-1
Power Windows
F-Series 100-1
Bronco I 100-2
Radio 130-1
Rear Window Defrost 56-1
Speed Control
Diesel 31-3
Gas 31-2
Starting System
Diesel 20-3
Gas 20-1
Trailer Adapter 95-1
Transmission Control 29-1
Vacuum Distribution 140-1
Vehicle Speed Sensor (VSS) 64-1
Warning Chimes 66-1
Warning Indicators 65-1
Windshield Wiper/Washer 80-1
Wiper/Washer (Interval) 81-1

IMPORTANT SAFETY NOTICE

Appropriate service methods and proper repair procedures are essential for the safe, reliable operation of all motor vehicles, as well as the personal safety of the individual doing the work. This Manual provides general directions for accomplishing service and repair work with tested, effective techniques. Following them will help assure reliability.

There are numerous variations in procedures, techniques, tools, and parts for servicing vehicles, as well as in the skill of the individual doing the work. This Manual cannot possibly anticipate all such variations and provide advice or cautions as to each. Accordingly, anyone who departs from the instructions provided in this Manual must first establish that he compromises neither his personal safety nor the vehicle integrity by his choice of methods, tools or parts.

2-1 HOW TO USE THIS MANUAL

The purpose of this manual is to make troubleshooting easier by showing the electrical and vacuum circuits of these vehicles in a clear and simple fashion. With each circuit is a description of *How the Circuit Works* and some *Troubleshooting Hints.* A Component Location chart lists components and references to pictures in the manual.

Notes, Cautions and Warnings containing important information appear in boxes on text pages. Notes provide additional information to help complete a particular procedure. Cautions provide information that could prevent making an error that could damage the vehicle. Warnings provide information to prevent personal injury. The warnings list on the following page contains general warnings to follow when working on a vehicle.

Components which work together are shown together. For example, all electrical components used in any circuit are shown on one diagram. The circuit breaker or fuse is shown at the top of the page. All wires, connectors, splices, switches, and motors are shown in the flow of current to ground at the bottom of the page. Notes are included which describe how switches and other components work. If a component is used in several different circuits, it is shown in several places.

For example, the Main Light Switch is an electrical part of many circuits and is repeated on many pages. In some cases, however, a component may seem (by its name) to belong on a page where it has no electrical connection. For example, Radio Illumination is electrically part of Instrument Illumination. But, because it has no electrical connection at all with the actual Radio circuit, it is not shown on the Radio page.

Troubleshooting Hints point the technician in a general direction, but are not intended as a step-by-step procedure. Ignition troubleshooting is an exception to this. It includes a step-by-step procedure of basic quick checks to locate some of the more common Ignition System problems. Reading the shop manual provides more detailed repair procedures.

Connector end views of switches and other components are shown in Cell 149 (beginning on page 149-1) to help with bench testing. The views show the harness wire colors that connect to the mating terminals. Connector colors and locations are shown in the *Location Index* chart. Two-color listings indicate separate colors for each connector half.

A Location Index, in Cell 152 (beginning on page 152-1), identifies individual components, connectors and splices. This index describes the component, connector or splice location and directs you to the component illustrations. In addition, the component base part number has been included for your convenience in ordering parts. A list of harness base numbers, harness names and major systems associated with the respective harness base part number is also included within the Location Index.

The Grounds pages show detailed views of multiple component ground points. This is useful for checking interconnections among the ground circuits of different diagrams.

Component Connectors with 5 or more cavities are shown in Cell 150 (beginning on page 150-1) to help with system troubleshooting. Any component connector with 5-9 cavities will be shown with a connector end view of the connector. A component with 10 or more connector cavities will have a pinout chart in addition to the connector face. The pinout chart contains information such as cavity number, wire number and color, and circuit function.

On some car lines, resistors and diodes are covered with PVC molds; terminals are also part of the molded assembly. The assembly plugs into a harness connector and is taped to the harness, outside the conduit.

In other cases, the resistor and diode assemblies will be covered with heat-shrinkable tubing, making the assembly small enough to be placed within the harness conduit.

The wiring diagrams show the number of times the resistors and diodes are used. The wiring diagrams also show the distance from connector/length of wire in exact centimeters. Resistors and diodes are identified on the wiring diagrams by the following base part numbers:

Resistor/diode assembly	14A601
Diode only	14A604

We welcome any comments you may have regarding this EVTM. Use the Feedback Sheet at the back of this manual to submit comments. The information submitted on this sheet will improve future editions.

3-1 HELPFUL REMINDERS

Before using the EVTM for troubleshooting, refer to the HELPFUL REMINDERS described on this page.

1. The abbreviation T/O, for take out, used in the Component Location Chart, refers to the point at which a harness branches to feed a component. Refer to the wiring harness illustration.

Wiring harness at back of Instrument Panel, showing typical T/O (Take Out) locations

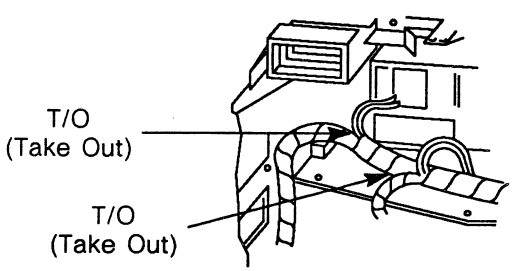

2. If a connector serves the same purpose in two separate versions (e.g., EFI/Carb), but is physically different, *two* connector numbers are used. However, if a connector serves the same purpose in two separate versions (e.g., EFI/Carb) and is physically the same, but the wire colors are different, only *one* connector number is used. If the same physical connector is used more than once, then more than *one* connector number is used.

3. Wiring diagrams provide a schematic picture of how and under what conditions the circuit is powered, of the current path to circuit components, and of how a circuit is grounded. Each circuit component is named (underlined titles). Wire and connector colors are listed (standard Ford color abbreviations are used):

COLOR ABBREVIATIONS

BL	**Blue**	**N**	**Natural**
BK	**Black**	**O**	**Orange**
BR	**Brown**	**PK**	**Pink**
DB	**Dark Blue**	**P**	**Purple**
DG	**Dark Green**	**R**	**Red**
GR	**Green**	**T**	**Tan**
GY	**Gray**	**W**	**White**
LB	**Light Blue**	**Y**	**Yellow**
LG	**Light Green**		

Whenever a wire is labeled with two colors, the first color listed is the basic color of the wire, and the second color listed is the stripe marking of the wire.

4. When reporting Vehicle Repair Location Codes to Ford Parts and Service Division, refer to Cell 160 (beginning on page 160-1).

   Note: Do *not* use the illustrations in Cell 151 (beginning on page 151-1) for reporting Vehicle Repair Location Codes.

5. **WARNINGS**

- *Always wear safety glasses for eye protection.*
- *Use safety stands whenever a procedure requires being under a vehicle.*
- *Be sure that the* **Ignition Switch** *is always in the OFF position, unless otherwise required by the procedure.*
- *Set the park brake when working on any vehicle. An automatic transmission should be in PARK. A manual transmission should be in NEUTRAL.*
- *Operate the engine only in a well-ventilated area to avoid danger of carbon monoxide.*
- *Keep away from moving parts when the engine is running, especially the fan and belts.*
- *To prevent serious burns, avoid contact with hot metal parts such as the radiator, exhaust manifold, tail pipe, catalytic converter and muffler.*
- *Do not allow flame or sparks near the battery. Gases are always present in and around the battery cell. An explosion could occur.*
- *Do not smoke.*
- *To avoid injury, always remove rings, watches, loose hanging jewelry and loose clothing.*

4-1 ELECTRICAL SYMBOLS

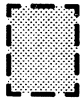

DASHED COMPONENT BOX
ONLY PART OF THE COMPONENT IS SHOWN ON THE PAGE; THE COMPONENT IS SHOWN COMPLETE IN ANOTHER LOCATION

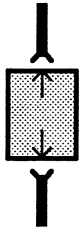

COMPONENT WITH CONNECTORS

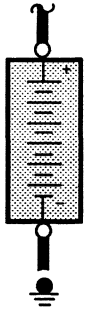

BATTERY

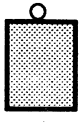

SCREW TERMINAL ON COMPONENT

SOLID STATE

SEALED ELECTRONIC COMPONENT
ANY CIRCUITRY SHOWN INSIDE THE BOX IS A FUNCTIONAL EQUIVALENT ONLY AND IS NOT EXACT

GROUND CONNECTION

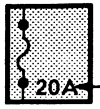

FUSE

CURRENT RATING

14 GA DG

FUSIBLE LINK

WIRE SIZE AND COLOR

FUSIBLE LINK CARTRIDGE

CARTRIDGE CURRENT RATING

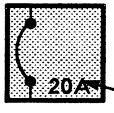

CIRCUIT BREAKER

CURRENT RATING

275
Y
63
R

SOLID WIRES

981
R/W
554
Y/BK

STRIPED WIRES

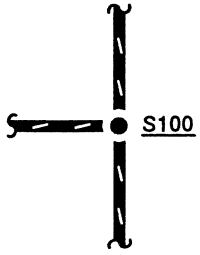

SPLICE OR CRIMP TERMINAL

FROM POWER

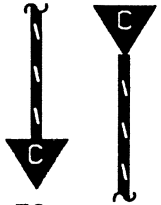

TO LOAD

"CUT" WIRES REFERENCED BETWEEN PAGES
ARROWS SHOW CURRENT FLOW FROM POWER TO GROUND

BACKUP LIGHTS

"REFERENCE" WIRES
COMPLETE WIRING SHOWN ON ANOTHER PAGE

ALTERNATE CIRCUIT PATHS

AUTOMATIC TRANSAXLE

MANUAL TRANSAXLE

C305

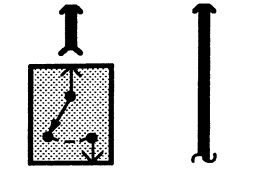

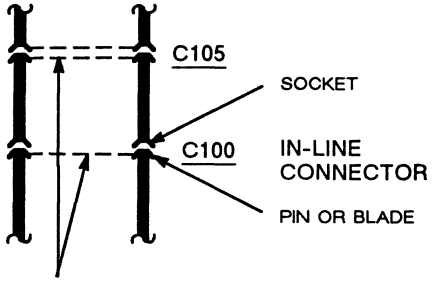

SINGLE OR DOUBLE DASHED LINE INDICATES THAT WIRE ON LEFT ALSO PASSES THROUGH THE SAME CONNECTOR

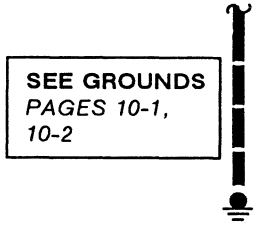

SEE GROUNDS
PAGES 10-1, 10-2

DASHED WIRE
CIRCUITRY IS NOT SHOWN IN COMPLETE DETAIL, BUT IS COMPLETE ON ANOTHER PAGE

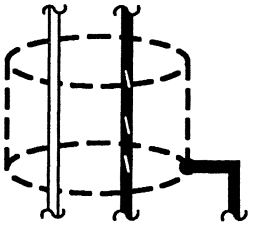

SHIELD
WIRES ARE COVERED BY A SHIELD

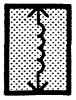

FIELD COIL OR CHOKE

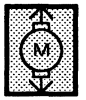

MOTOR

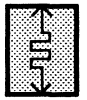

HEATING ELEMENT

THERMISTOR

RHEOSTAT OR POTENTIOMETER

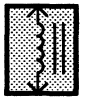

SOLENOID

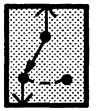

SWITCH

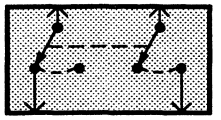

GANGED SWITCHES
CONTACTS MOVE AT THE SAME TIME

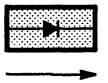

DIODES
CURRENT FLOWS IN DIRECTION OF ARROW ONLY

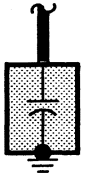

CAPACITOR

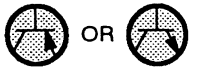

TRANSISTOR

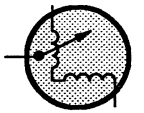

GAUGE

LIGHT BULB

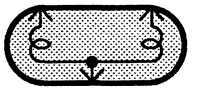

DUAL FILAMENT LIGHT BULB

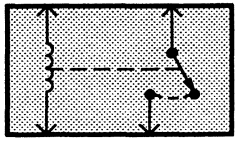

RELAY
CONTACTS CHANGE POSITION WITH CURRENT THROUGH COIL

5-1 HOW TO FIND THE ELECTRICAL CONCERN

TROUBLESHOOTING STEPS

These six steps present an orderly method of troubleshooting.

Step 1. Verify the concern.

- Operate the complete system to check the accuracy and completeness of the customer's complaint.

Step 2. Narrow the concern.

- Using the EVTM, narrow down the possible causes and locations of the concern to pinpoint the exact cause.
- Read the description of *How the Circuit Works* and study the wiring diagram. You should then know enough about the circuit operation to determine where to check for the trouble. Further information can be found in the shop manual pages listed after *How the Circuit Works.*

Step 3. Test the cause.

- Use electrical test procedures to find the specific cause of the symptoms.
- *Troubleshooting Hints* will give you helpful ideas.
- The *Component Location Charts* and the pictures will help you find components. Following each chart, there is a reference to the Location Index at the end of the manual. This index gives component location information for connectors, diodes, resistors, splices and grounds.

Step 4. Verify the cause.

- Confirm that you have found the correct cause by connecting jumper wires and/or temporarily installing a known good component and operating the circuit.

Step 5. Make the repair.

- Repair or replace the inoperative component.

Step 6. Verify the repair.

- Operate the system as in Step 1 and check that your repair has removed all symptoms without creating any new symptoms.

Some engine circuits may need special test equipment and special procedures. See the *shop manual* and other service books for details. You will find these circuits in this manual to be helpful with these special tests.

TROUBLESHOOTING TOOLS

JUMPER WIRE

This is a test lead used to connect two points of a circuit. A Jumper Wire can complete a circuit, bypassing an open.

WARNING

Never use a jumper wire across loads (motors, etc.) connected between hot and ground. This direct battery short may cause injury or fire.

VOLTMETER

A DC Voltmeter measures circuit voltage. Connect negative (- or black) lead to ground, and positive (+ or red) lead to voltage measuring point.

OHMMETER

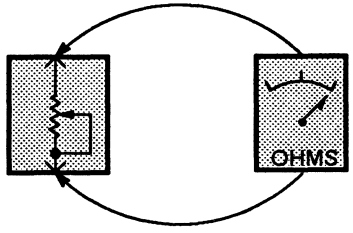

Figure 1–Resistance Check

An Ohmmeter shows the resistance between two connected points (Figure 1).

TEST LAMP

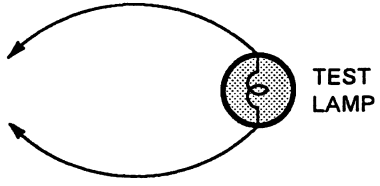

Figure 2–Test Lamp

A Test Light is a 12-volt bulb with two test leads (Figure 2).

Uses: Voltage Check, Short Check.

SELF-POWERED TEST LAMP

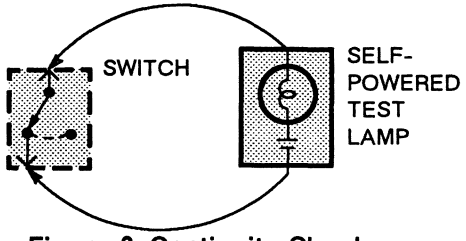

Figure 3–Continuity Check

The Self-Powered Test Lamp is a bulb, battery and set of test leads wired in series (Figure 3). When connected to two points of a continuous circuit, the bulb glows.

Uses: Continuity Check, Ground Check.

> *CAUTION*
>
> *When using a self-powered test lamp or ohmmeter, be sure power is off in circuit during testing. Hot circuits can cause equipment damage and false readings.*

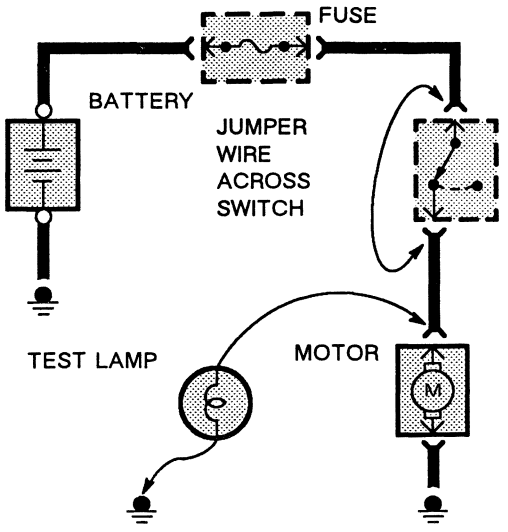

Figure 4—Switch Circuit Check and Voltage Check

In an inoperative circuit with a switch in series with the load, jumper the terminals of the switch to power the load. If jumpering the terminals powers the circuit, the switch is inoperative (Figure 4).

CONTINUITY CHECK
(Locating open circuits)

Connect one lead of Self-Powered Test Lamp or Ohmmeter to each end of circuit (Figure 3). Lamp will glow if circuit is closed. Switches and fuses can be checked in the same way.

VOLTAGE CHECK

Connect one lead of test lamp to a known good ground or the negative (-) battery terminal. Test for voltage by touching the other lead to the test point. Bulb goes on when the test point has voltage (Figure 4).

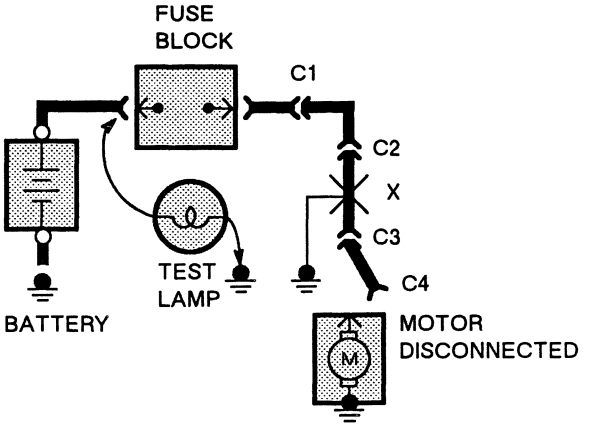

Figure 5—Short Check

A fuse that repeatedly blows is usually caused by a short to ground. It's important to be able to locate such a short quickly (Figure 5).

1. Turn off everything powered through the fuse.
2. Disconnect other loads powered through the fuse:
   - Motors: disconnect motor connector (Connector C4 in Figure 5).
   - Lights: remove bulbs.
3. Turn Ignition Switch to RUN (if necessary) to power fuse.
4. Connect one Test Lamp lead to hot end of blown fuse. Connect other lead to ground. Bulb should glow, showing power to fuse. *(This step is just a check to be sure you have power to the circuit.)*

5. Disconnect the test lamp lead that is connected to ground, and reconnect it to the load side of the fuse at the connector of the disconnected component. (In Figure 5, connect the test lamp lead to connector C4.)
   - If the Test Lamp is off, the short is in the disconnected component.
   - If the Test Lamp goes on, the short is in the wiring. You must find the short by disconnecting the circuit connectors, one at a time, until the Test Lamp goes out. For example, in figure 5 with a ground at X, the bulb stays on when C1 or C2 is disconnected, but goes out after disconnecting C3. This means the short is between C2 and C3.

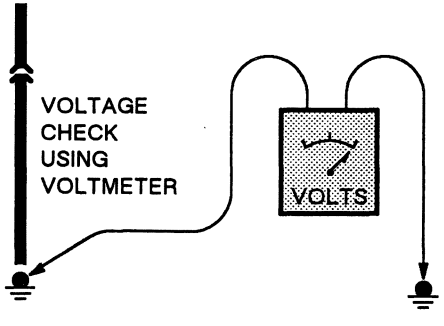

Figure 6—Ground Check

Turn on power to the circuit. Perform a Voltage Check between the suspected inoperative ground and the frame. Any indicated voltage means that the ground is inoperative (Figure 6).

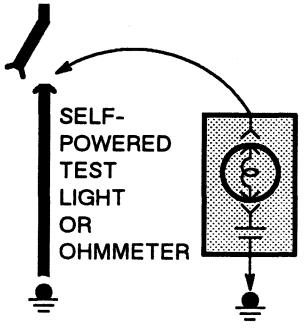

Figure 7—Ground Check

Turn off power to the circuit. Connect one lead of a Self-Powered Test Lamp or Ohmmeter to the wire in question and the other lead to a known ground. If the bulb glows, the circuit ground is OK (Figure 7).

TROUBLESHOOTING HINTS

The circuit schematics in this manual make it easy to identify common points in circuits. This knowledge can help narrow the concern to a specific area. For example, if several circuits fail at the same time, check for a common power or ground connection (See *Power Distribution* or *Grounds*). If part of a circuit fails, check the connections between the part that works and the part that doesn't work.

For example, if lo beam headlamps work, but hi beams and the indicator lamp don't work, then power and ground paths must be good. Since the dimmer switch is the component that switches this power to the high beam lights and indicator, it is most likely the cause of failure.

Troubleshooting Hints unique to a particular circuit are given in a new, three column format. Included in the charts are conditions that may develop, possible causes, and one or more tests that can be done quickly to determine the cause of the condition.

10-1 GROUNDS (G100, G101)

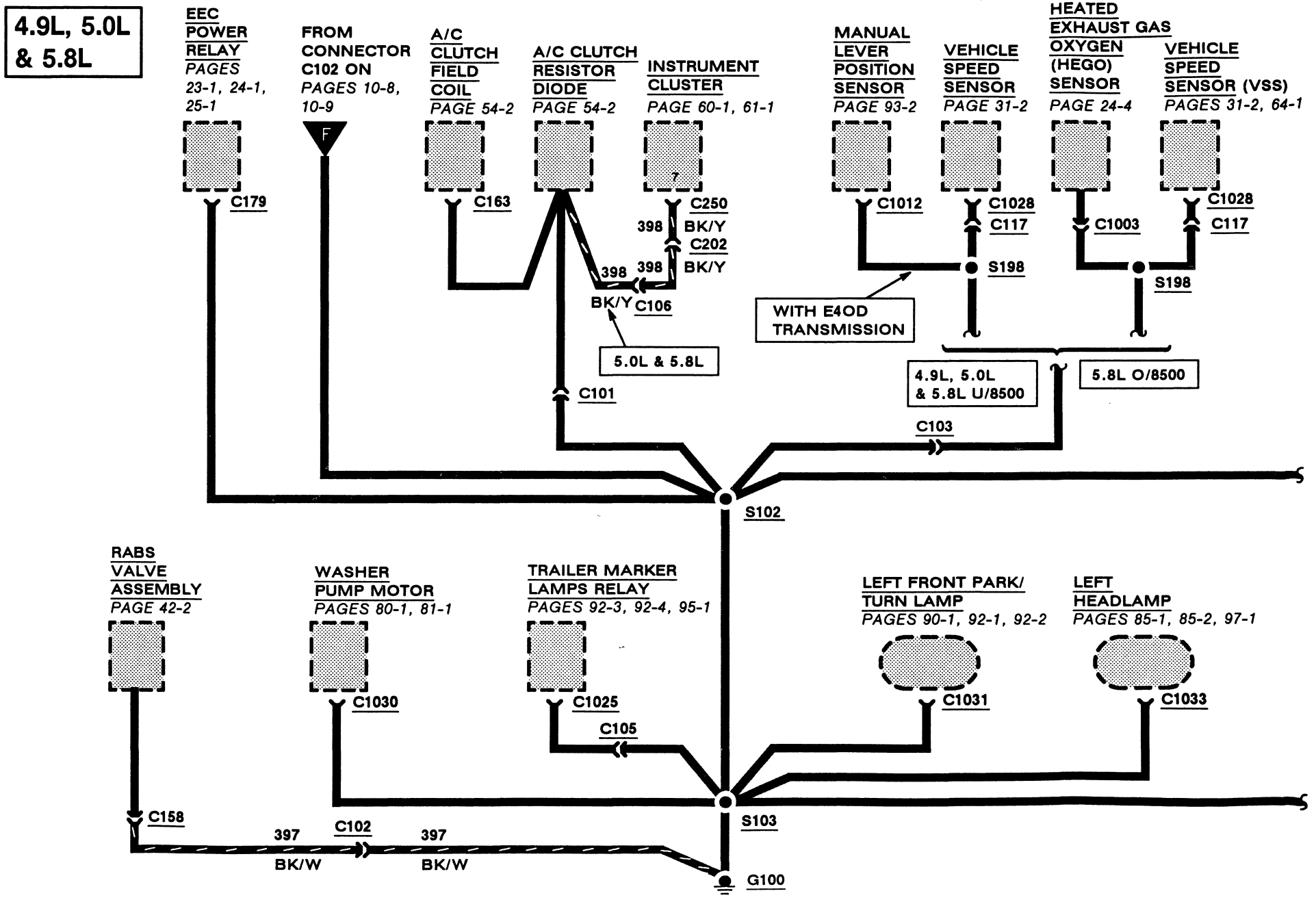

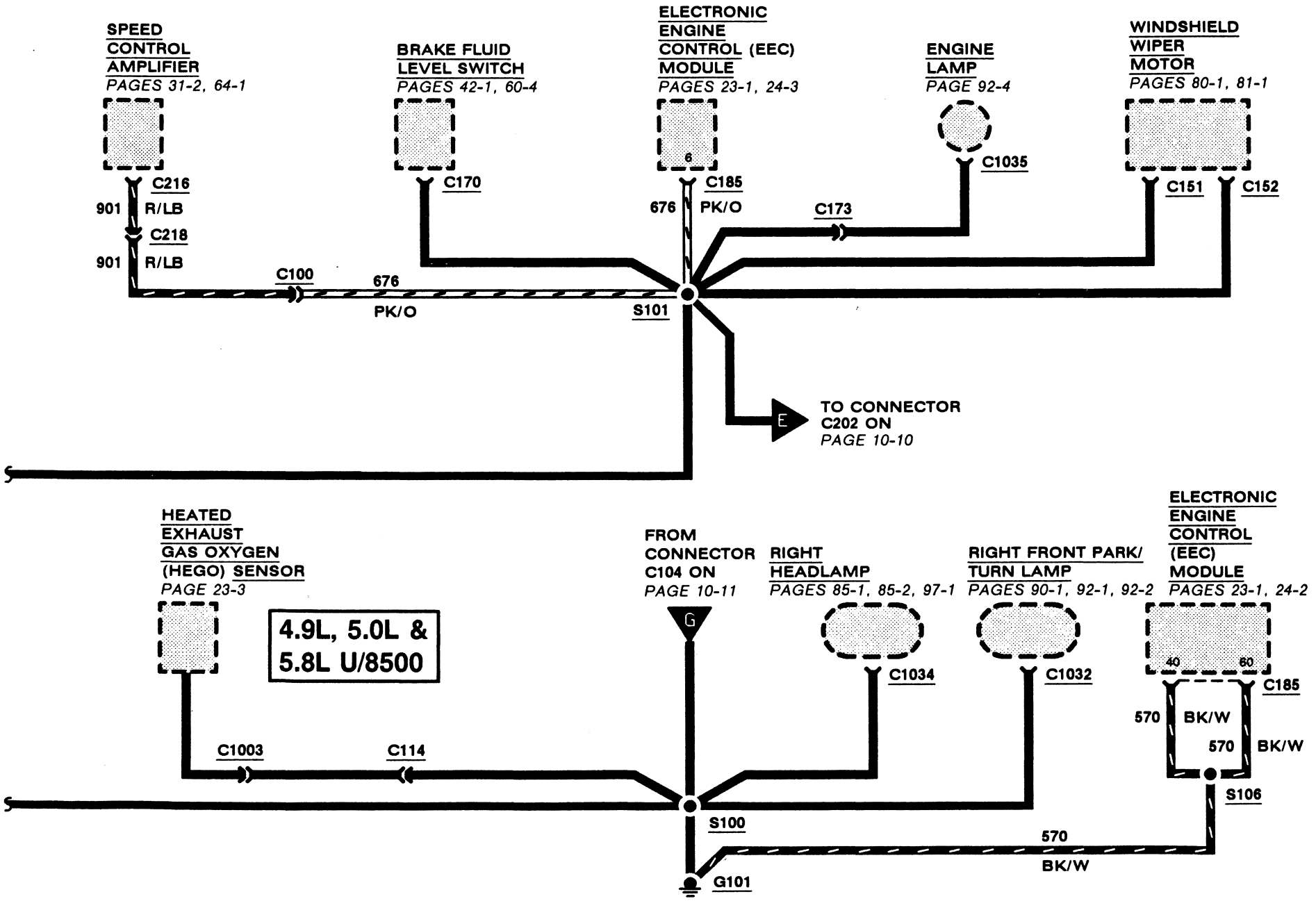
SPEED CONTROL AMPLIFIER
PAGES 31-2, 64-1
C216
901 R/LB
C218
901 R/LB
BRAKE FLUID LEVEL SWITCH
PAGES 42-1, 60-4
C170
ELECTRONIC ENGINE CONTROL (EEC) MODULE
PAGES 23-1, 24-3
6
C185
676 PK/O
ENGINE LAMP
PAGE 92-4
C1035
C173
WINDSHIELD WIPER MOTOR
PAGES 80-1, 81-1
C151
C152
C100
676
PK/O
S101
E
TO CONNECTOR C202 ON
PAGE 10-10
HEATED EXHAUST GAS OXYGEN (HEGO) SENSOR
PAGE 23-3
4.9L, 5.0L & 5.8L U/8500
C1003
C114
FROM CONNECTOR C104 ON
PAGE 10-11
G
RIGHT HEADLAMP
PAGES 85-1, 85-2, 97-1
C1034
RIGHT FRONT PARK/ TURN LAMP
PAGES 90-1, 92-1, 92-2
C1032
ELECTRONIC ENGINE CONTROL (EEC) MODULE
PAGES 23-1, 24-2
40
60
C185
570 BK/W
570 BK/W
S106
S100
570
BK/W
G101

10-3 GROUNDS (G100, G101, G102)

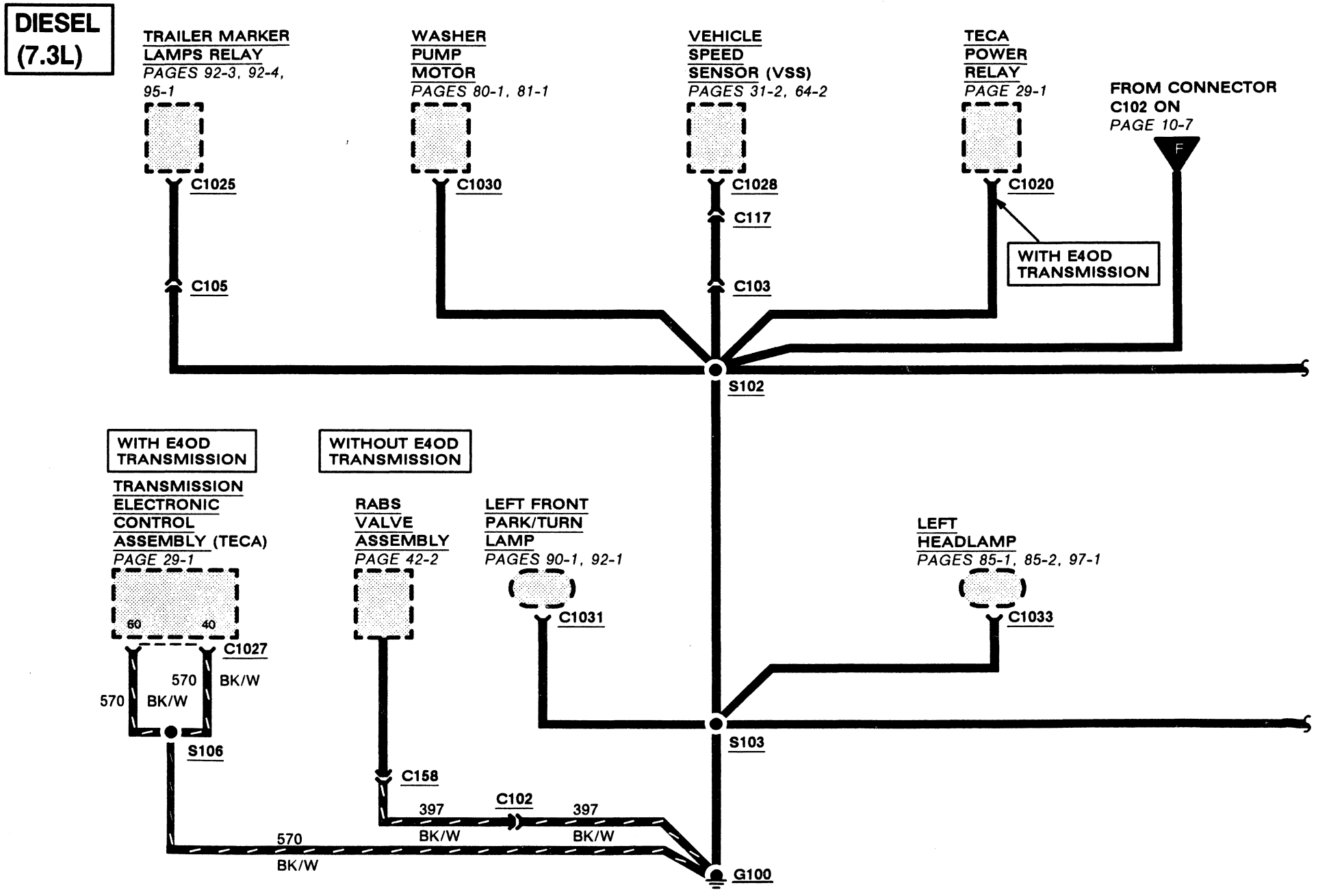

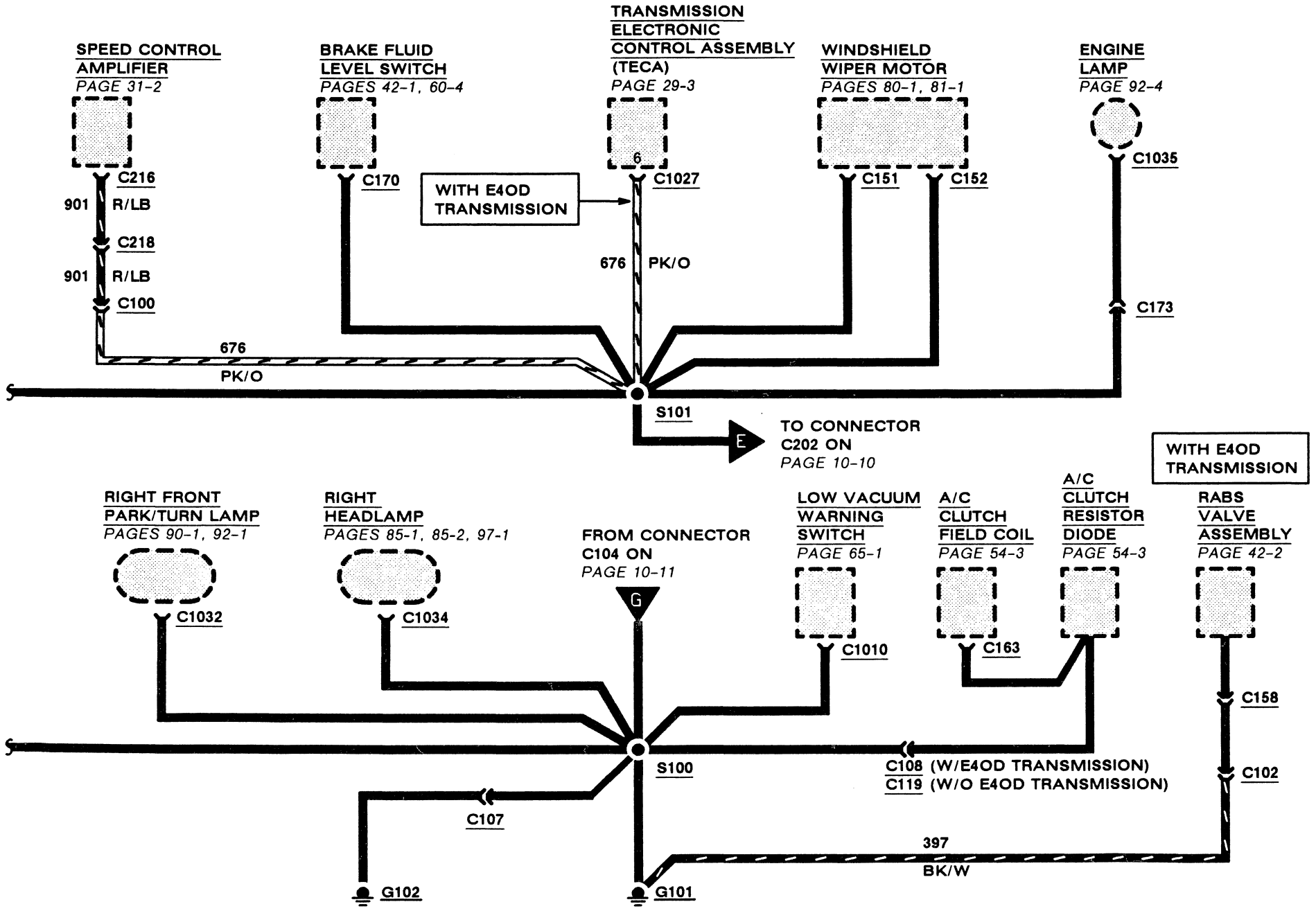
SPEED CONTROL AMPLIFIER
PAGE 31-2
C216
901 R/LB
C218
901 R/LB
C100
BRAKE FLUID LEVEL SWITCH
PAGES 42-1, 60-4
C170
TRANSMISSION ELECTRONIC CONTROL ASSEMBLY (TECA)
PAGE 29-3
6
C1027
WITH E4OD TRANSMISSION
676 PK/O
WINDSHIELD WIPER MOTOR
PAGES 80-1, 81-1
C151
C152
ENGINE LAMP
PAGE 92-4
C1035
C173
676
PK/O
S101
TO CONNECTOR C202 ON
PAGE 10-10
E
WITH E4OD TRANSMISSION
RIGHT FRONT PARK/TURN LAMP
PAGES 90-1, 92-1
C1032
RIGHT HEADLAMP
PAGES 85-1, 85-2, 97-1
C1034
FROM CONNECTOR C104 ON
PAGE 10-11
G
LOW VACUUM WARNING SWITCH
PAGE 65-1
C1010
A/C CLUTCH FIELD COIL
PAGE 54-3
C163
A/C CLUTCH RESISTOR DIODE
PAGE 54-3
RABS VALVE ASSEMBLY
PAGE 42-2
C158
C102
S100
C108 (W/E4OD TRANSMISSION)
C119 (W/O E4OD TRANSMISSION)
C107
397
BK/W
G102
G101

10-5 GROUNDS (G100, G101)

7.5L

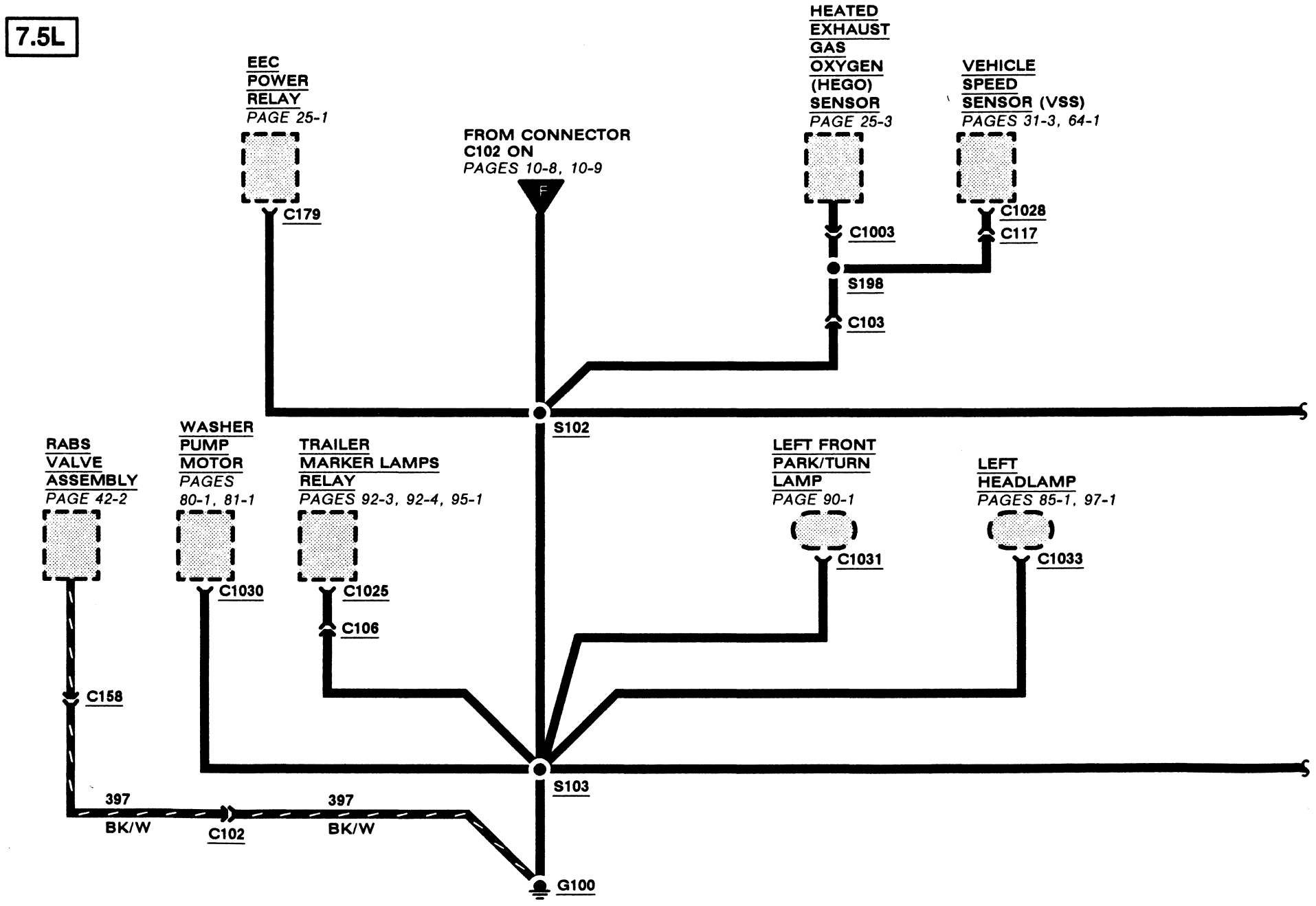

7.5L

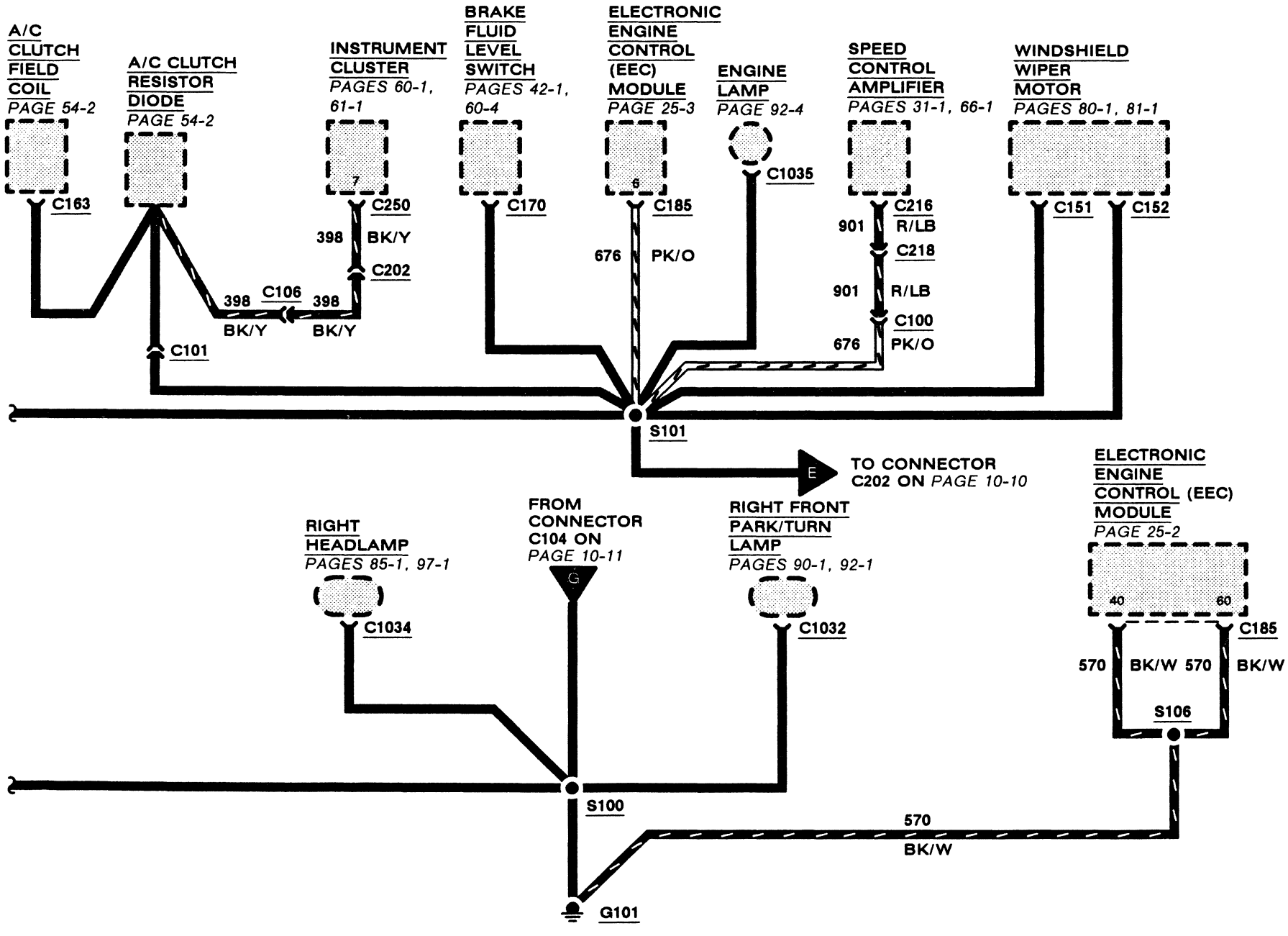
A/C CLUTCH FIELD COIL
PAGE 54-2
C163
A/C CLUTCH RESISTOR DIODE
PAGE 54-2
C101
INSTRUMENT CLUSTER
PAGES 60-1, 61-1
7
C250
398 BK/Y
C202
398 C106 398
BK/Y BK/Y
BRAKE FLUID LEVEL SWITCH
PAGES 42-1, 60-4
C170
ELECTRONIC ENGINE CONTROL (EEC) MODULE
PAGE 25-3
6
C185
676 PK/O
ENGINE LAMP
PAGE 92-4
C1035
SPEED CONTROL AMPLIFIER
PAGES 31-1, 66-1
C216
901 R/LB
C218
901 R/LB
C100
676 PK/O
WINDSHIELD WIPER MOTOR
PAGES 80-1, 81-1
C151
C152
S101
E
TO CONNECTOR C202 ON PAGE 10-10
RIGHT HEADLAMP
PAGES 85-1, 97-1
C1034
FROM CONNECTOR C104 ON PAGE 10-11
G
RIGHT FRONT PARK/TURN LAMP
PAGES 90-1, 92-1
C1032
ELECTRONIC ENGINE CONTROL (EEC) MODULE
PAGE 25-2
40
60
C185
570 BK/W 570 BK/W
S106
S100
570
BK/W
G101

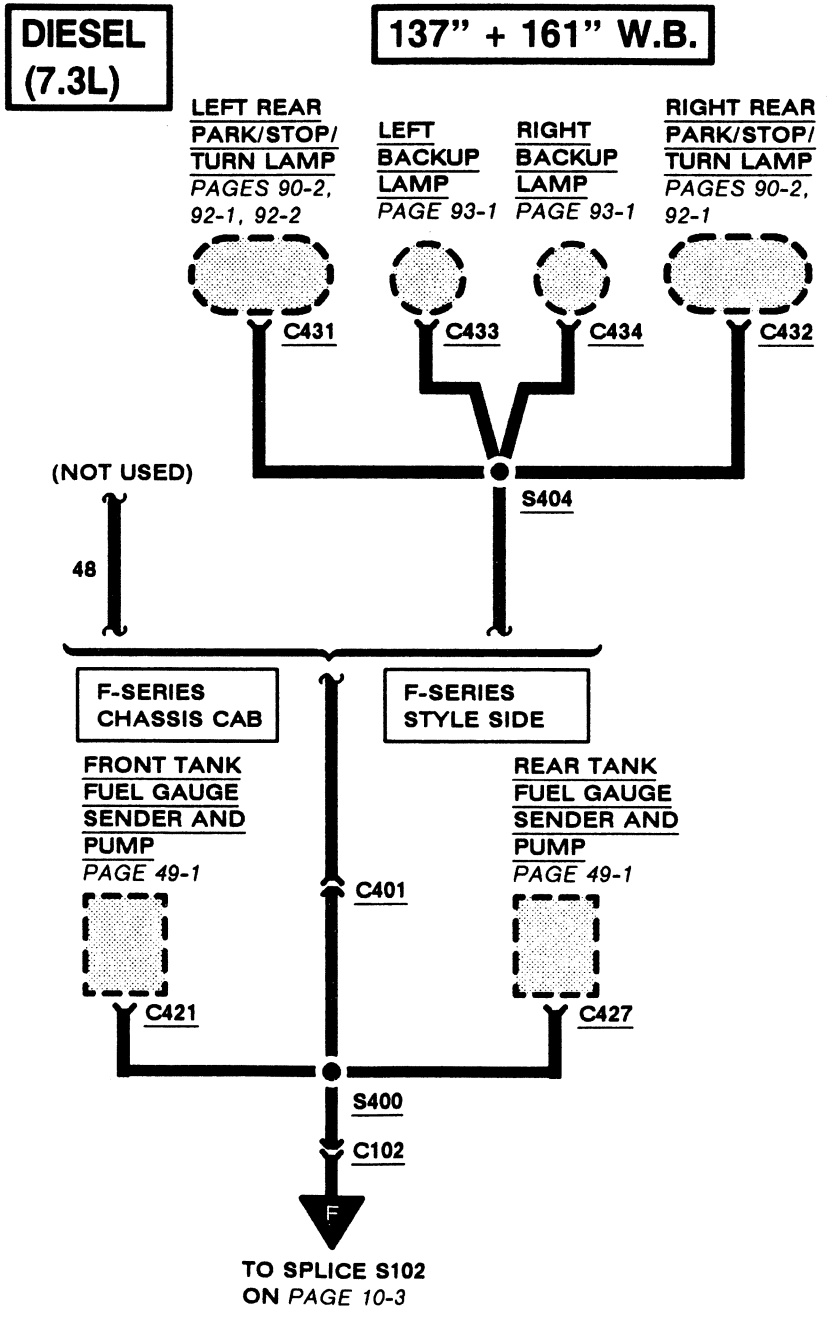
DIESEL (7.3L)
137" + 161" W.B.
LEFT REAR PARK/STOP/ TURN LAMP
PAGES 90-2, 92-1, 92-2
LEFT BACKUP LAMP
PAGE 93-1
RIGHT BACKUP LAMP
PAGE 93-1
RIGHT REAR PARK/STOP/ TURN LAMP
PAGES 90-2, 92-1
C431
C433
C434
C432
S404
(NOT USED)
48
F-SERIES CHASSIS CAB
F-SERIES STYLE SIDE
FRONT TANK FUEL GAUGE SENDER AND PUMP
PAGE 49-1
REAR TANK FUEL GAUGE SENDER AND PUMP
PAGE 49-1
C401
C421
C427
S400
C102
F
TO SPLICE S102 ON PAGE 10-3

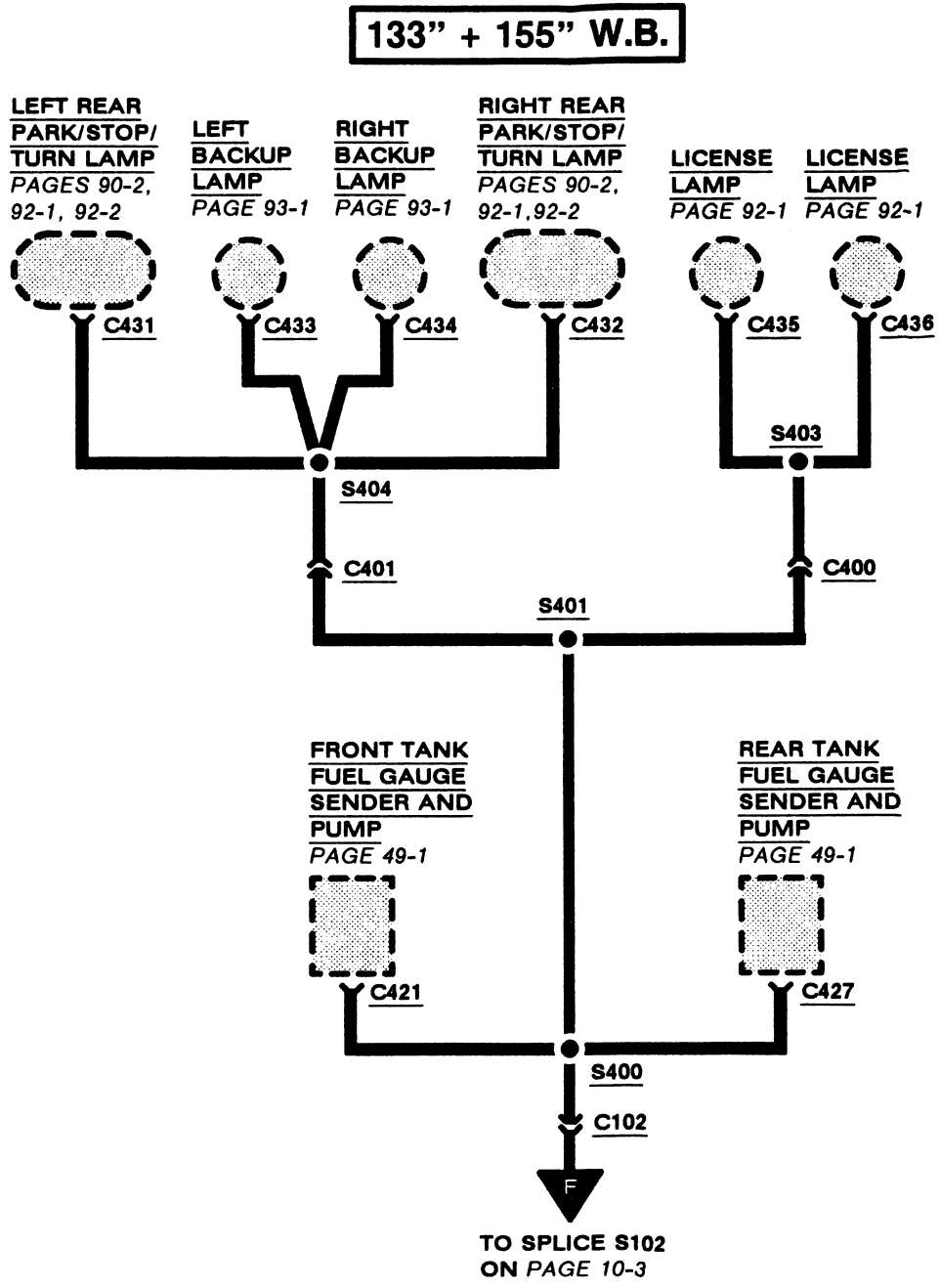
133" + 155" W.B.
LEFT REAR PARK/STOP/ TURN LAMP
PAGES 90-2, 92-1, 92-2
LEFT BACKUP LAMP
PAGE 93-1
RIGHT BACKUP LAMP
PAGE 93-1
RIGHT REAR PARK/STOP/ TURN LAMP
PAGES 90-2, 92-1,92-2
LICENSE LAMP
PAGE 92-1
LICENSE LAMP
PAGE 92-1
C431
C433
C434
C432
C435
C436
S403
S404
C401
C400
S401
FRONT TANK FUEL GAUGE SENDER AND PUMP
PAGE 49-1
REAR TANK FUEL GAUGE SENDER AND PUMP
PAGE 49-1
C421
C427
S400
C102
F
TO SPLICE S102 ON PAGE 10-3

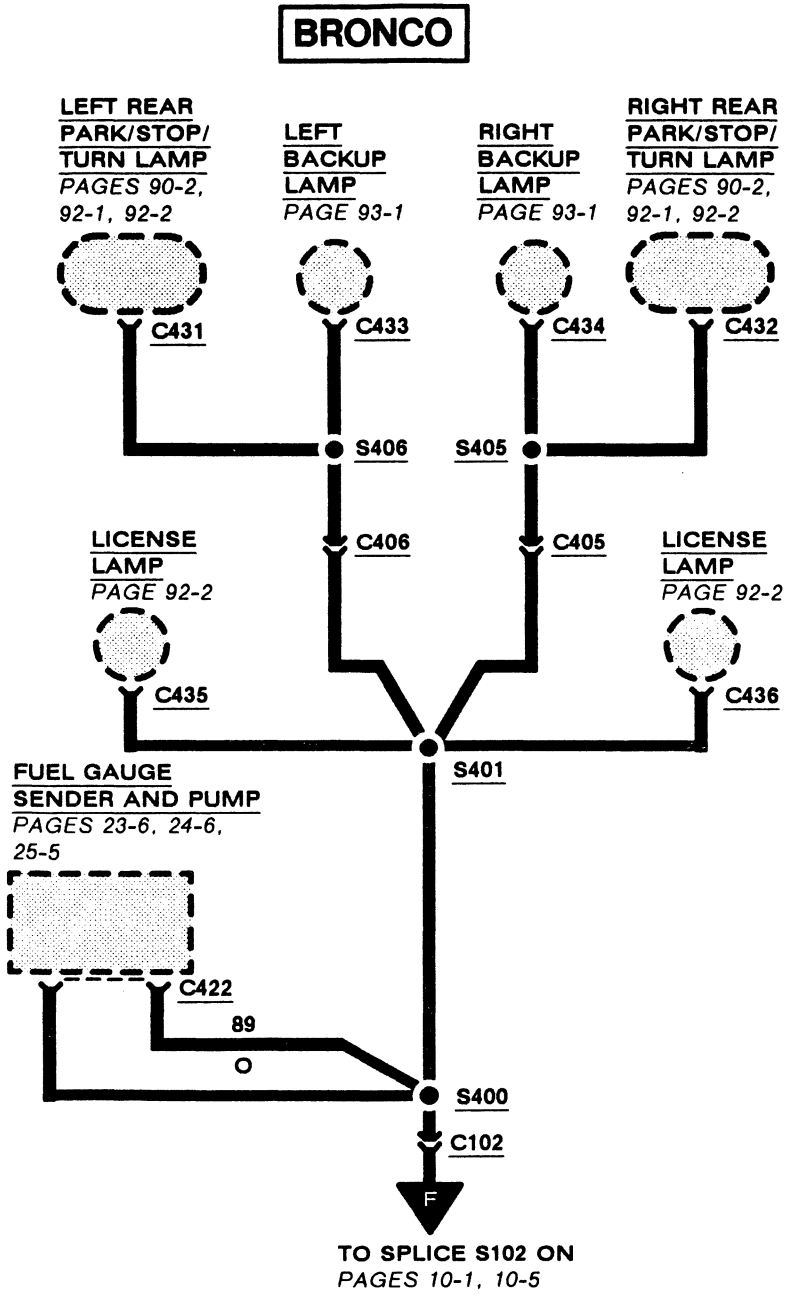
BRONCO
LEFT REAR PARK/STOP/ TURN LAMP
PAGES 90-2, 92-1, 92-2
LEFT BACKUP LAMP
PAGE 93-1
RIGHT BACKUP LAMP
PAGE 93-1
RIGHT REAR PARK/STOP/ TURN LAMP
PAGES 90-2, 92-1, 92-2
C431
C433
C434
C432
S406
S405
C406
C405
LICENSE LAMP
PAGE 92-2
LICENSE LAMP
PAGE 92-2
C435
C436
S401
FUEL GAUGE SENDER AND PUMP
PAGES 23-6, 24-6, 25-5
C422
89
O
S400
C102
F
TO SPLICE S102 ON
PAGES 10-1, 10-5

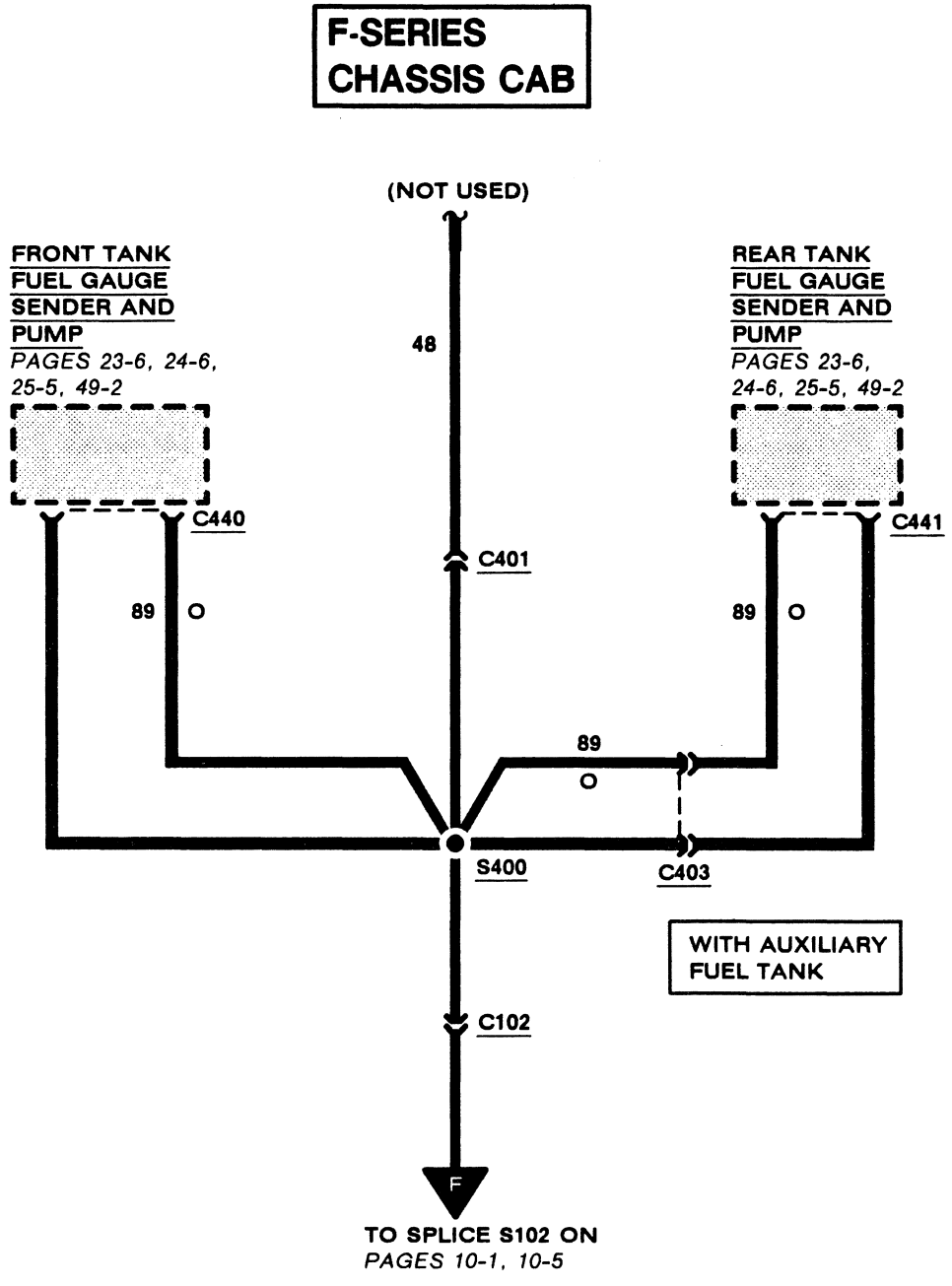
F-SERIES CHASSIS CAB
(NOT USED)
48
FRONT TANK FUEL GAUGE SENDER AND PUMP
PAGES 23-6, 24-6, 25-5, 49-2
REAR TANK FUEL GAUGE SENDER AND PUMP
PAGES 23-6, 24-6, 25-5, 49-2
C440
C441
C401
89
O
89
O
89
O
S400
C403
WITH AUXILIARY FUEL TANK
C102
F
TO SPLICE S102 ON
PAGES 10-1, 10-5

F-SERIES, STYLE SIDE & DWR STYLE SIDE

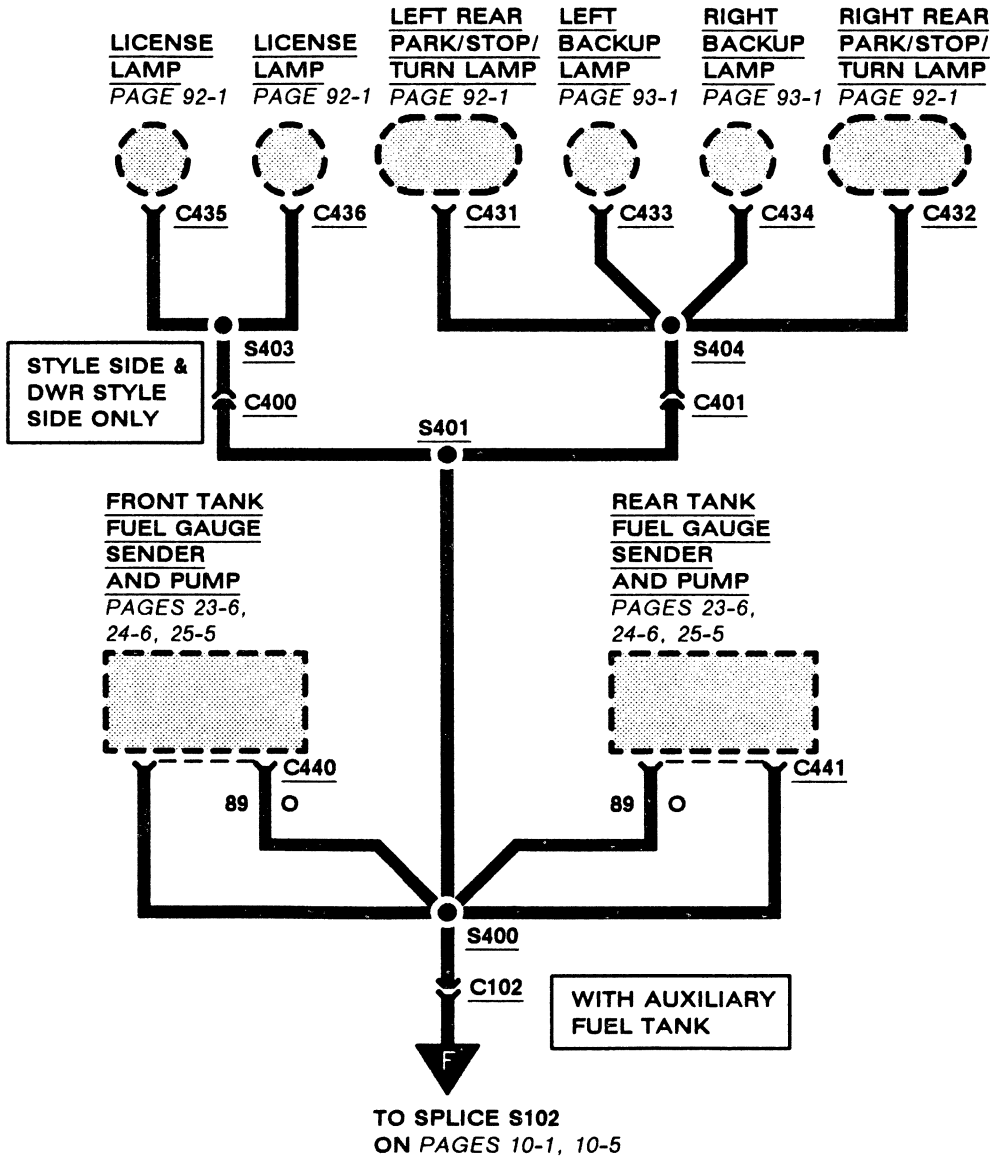

DRW STYLE SIDE

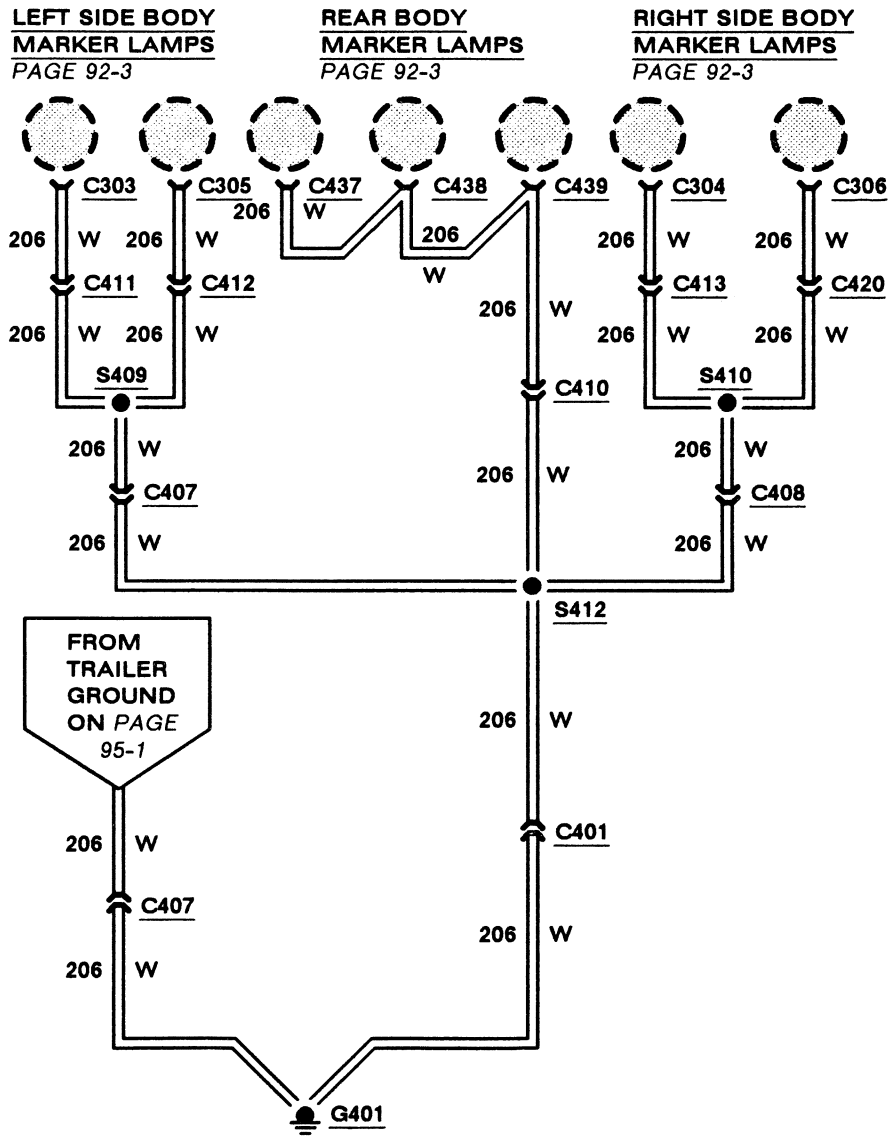

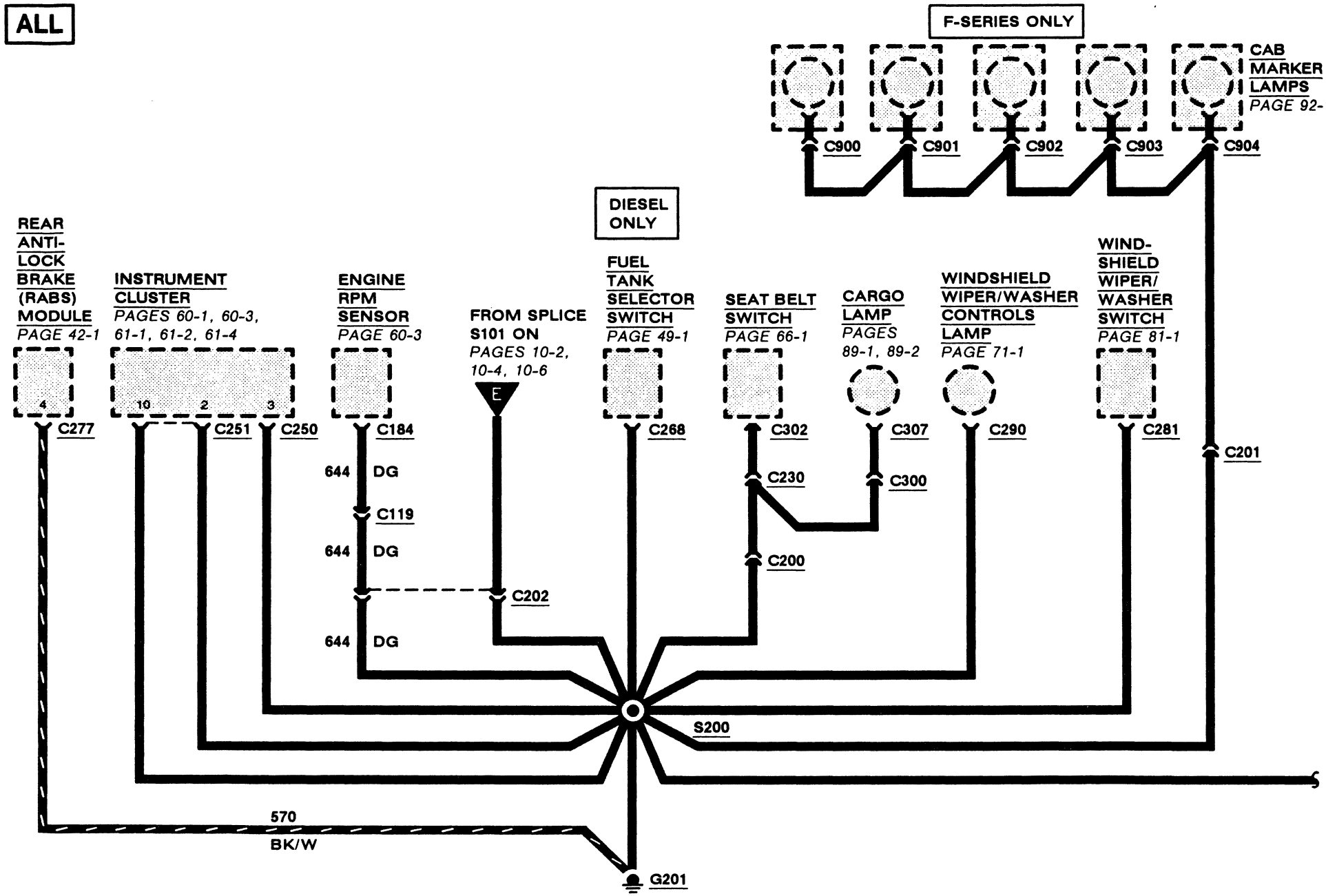
ALL
F-SERIES ONLY
CAB MARKER LAMPS
PAGE 92-1
C900
C901
C902
C903
C904
DIESEL ONLY
REAR ANTI-LOCK BRAKE (RABS) MODULE
PAGE 42-1
INSTRUMENT CLUSTER
PAGES 60-1, 60-3, 61-1, 61-2, 61-4
ENGINE RPM SENSOR
PAGE 60-3
FROM SPLICE S101 ON
PAGES 10-2, 10-4, 10-6
FUEL TANK SELECTOR SWITCH
PAGE 49-1
SEAT BELT SWITCH
PAGE 66-1
CARGO LAMP
PAGES 89-1, 89-2
WINDSHIELD WIPER/WASHER CONTROLS LAMP
PAGE 71-1
WIND-SHIELD WIPER/ WASHER SWITCH
PAGE 81-1
4
10
2
3
E
C277
C251
C250
C184
C268
C302
C307
C290
C281
C201
644 DG
C119
644 DG
C202
644 DG
C230
C300
C200
S200
570
BK/W
G201

10-11 GROUNDS (G201)

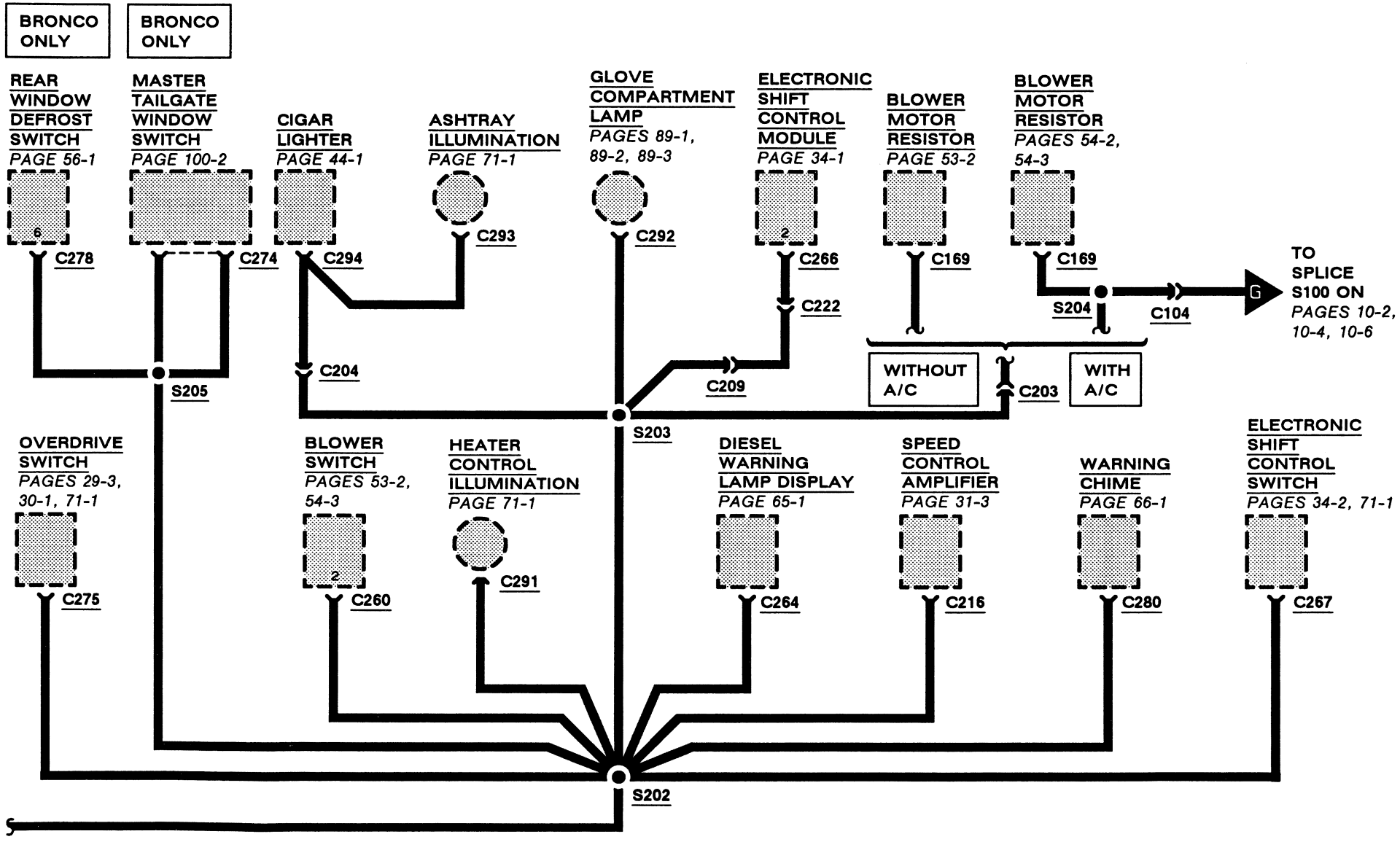

HOW THE CIRCUIT WORKS

The ground circuits shown here are complete and connect several components together to screw terminal ground points. Parts of these circuits may be shown on other pages throughout the book. Partial ground circuits are shown dashed on those pages.

All simple or component ground circuits are shown on the individual circuit pages and are complete on those pages.

All wires are 57 BK unless otherwise noted.

Refer to Location Index, Cell 152, for Base Part Number information and Connector, Splice, Ground, Resistor and Diode locations.

11-1 CIRCUIT PROTECTION/FUSE PANEL

CIRCUIT PROTECTION DEVICES

Electrical circuits on this vehicle may be protected by fuses, fusible links, fusible link cartridges, circuit breakers, or a combination of these devices.

BLADE TYPE FUSE

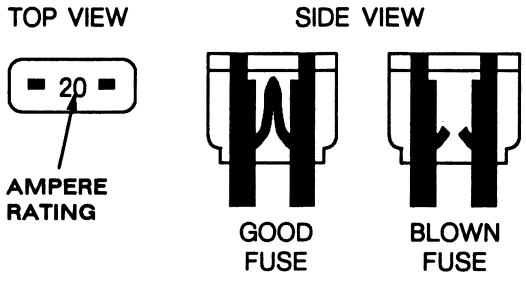

Blade type fuses have a transparent plastic housing. To check a fuse, pull it from the fuse panel and look at the fuse element through the housing. Always replace a blown fuse with a new fuse that has the same ampere rating.

The ampere rating of a blade type fuse can also be determined by following the color code shown here:

BLADE FUSE COLOR CODING	
AMPERE RATING	HOUSING COLOR
4	Pink
5	Tan
10	Red
15	Light Blue
20	Yellow
25	Natural
30	Light Green

FUSIBLE LINK

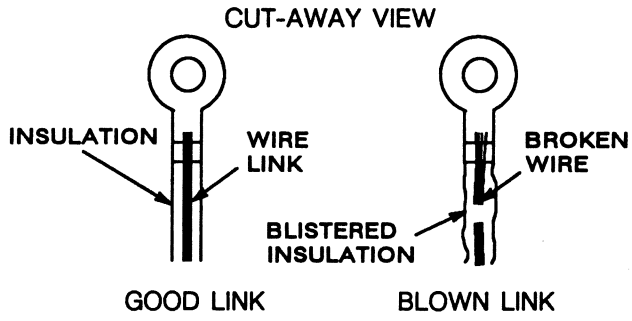

Fusible links are short lengths of wire that are smaller in diameter than the wires they are protecting. Fusible link wire is covered with a special thick, non-flammable insulation. An overload condition causes the insulation to blister. If the overload condition continues, the wire link will melt. To check a fusible link, look for blistered insulation. If the insulation is okay, pull lightly on the wire; If the fusible link stretches, the wire has melted.

When replacing fusible links, first cut the protected wire where it is connected to the fusible link. Then, tightly crimp or solder the new link to the protected wire.

Fusible links are often identified by color coding of the insulation, as shown here:

FUSIBLE LINK COLOR CODING	
WIRE LINK SIZE	INSULATION COLOR
20 GA	Blue
18 GA	Brown or Red
16 GA	Black or Orange
14 GA	Green
12 GA	Gray

FUSIBLE LINK CARTRIDGE

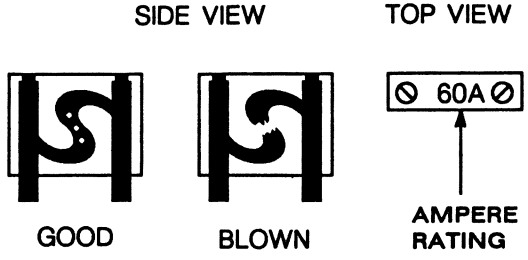

Fusible link cartridges have a transparent colored plastic housing. To check a fusible link cartridge, look at the fuse element through the side of th housing.

To replace a fusible link cartridge, pull it from the fuse box or panel. Always replace a blown fusible link cartridge with a new one having the same ampere rating.

The ampere rating of a fusible link cartridge can also be determined by following the color code shown here:

FUSIBLE LINK CARTRIDGE COLOR CODING	
AMPERE RATING	HOUSING COLOR
30	Light Green
40	Amber
50	Red
60	Blue

CIRCUIT BREAKER

Some circuits are protected by circuit breakers (abbreviated "c. b." in fuse chart). They can be Fuse Panel mounted or in-line. Like fuses, they are rated in amperes.

Each circuit breaker conducts current through an arm made of two types of metal bonded together (bimetal arm). If the arm starts to carry too much current, it heats up. As one metal expands faster than the other the arm bends, opening the contacts. Current flow is broken. A circuit breaker can be the cycling or non-cycling type.

FUSE PANEL MOUNTED CYCLING TYPE

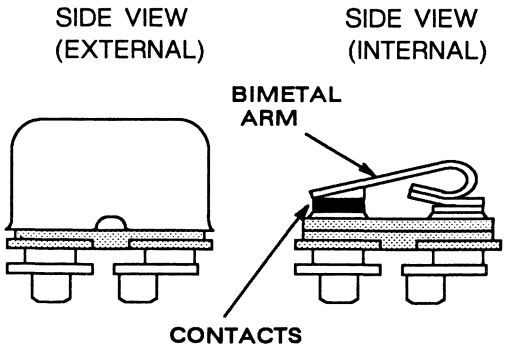

IN-LINE MOUNTED CYCLING TYPE

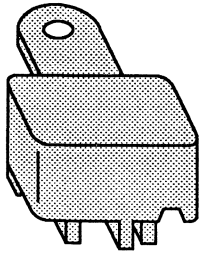

In the cycling type, the bimetal arm cools and straightens out. This cycle repeats as long as the overcurrent exists and power is applied.

FUSE PANEL MOUNTED NON-CYCLING TYPE

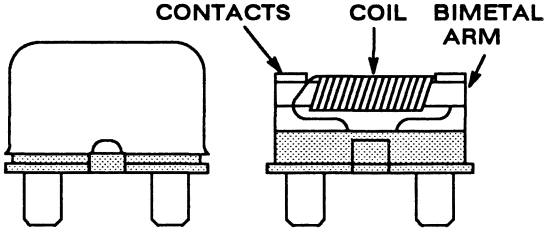

FUSE PANEL MOUNTED MANUAL RESET TYPE

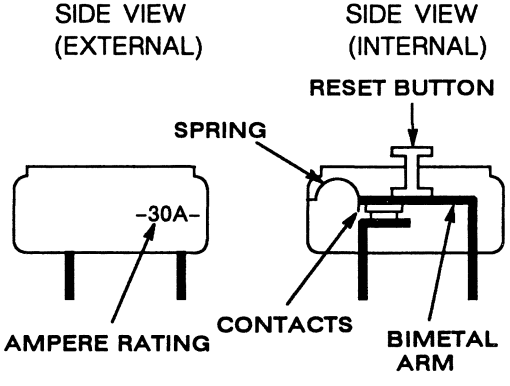

Two types of non-cycling circuit breakers are used; one is reset by removing power from the circuit, and the other is reset by depressing a reset button.

In the first type, there is a coil wrapped around the bimetal arm. When an overcurrent exists and the contacts open, a small current passes through the coil. This current through the coil is not enough to operate a load, but it does heat up both the coil and the bi-metal arm. This keeps the arm in the open position until power is removed.

In the second type, a spring pushes the bimetal arm down and holds the contacts together. When an overcurrent condition exists and the bimetal arm heats up, the bimetal arm bends enough to overcome the spring and the contacts snap open. The contacts stay open until the reset button is pushed and the contacts snap together again.

DIODE

Diodes are electrical devices that permit current to flow in one direction only. The current flows in the direction indicated by the arrow.

11-3 CIRCUIT PROTECTION/FUSE PANEL

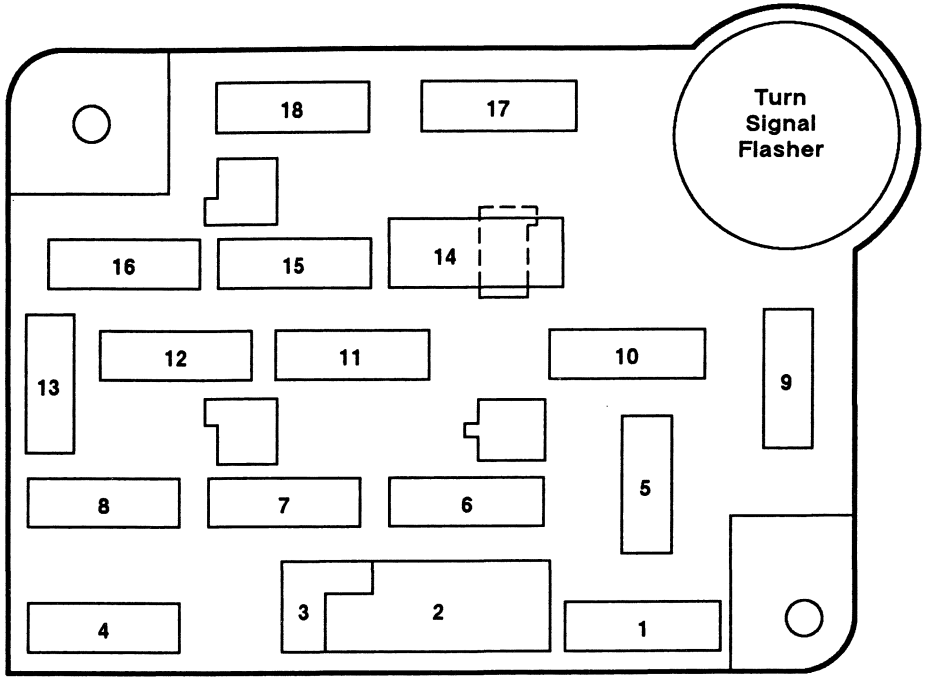

Fuse Value Amps	Color Code
4	Pink
5	Tan
10	Red
15	Light Blue
20	Yellow
25	Natural
30	Light Green

Power Distribution

The Alternator and Battery are connected together at the Starter Relay hot terminal. Other circuits originate at the Starter Relay hot terminal and are protected by fuse links. Low power circuits are also protected by fuses.

The Ignition Switch and Main Light Switch are powered at all times, as are fuses 1, 4, 8, 12 and 16. The other fuses are powered through the Ignition Switch or the Main Light Switch.

Fuse Position	Amps	Circuits Protected
1	15	Stop and Hazard Lamps, Anti-lock Brakes, Speed Control
2	—	(Not Used)
3	—	(Not Used)
4	15	Exterior Illumination, Instrument Illumination, Radio Clock Illumination
5	15	Turn Lamps, Daytime Running Lamps, Overdrive Switch, Backup Lamps, Hego Sensor and Rear Window Defrost (Bronco Only)
6	15	Speed Control and All Wheel Drive (Bronco Only)
7	—	(Not Used)
8	15	Dome Lamp, Map Lamp, Radio Memory, Cargo Lamps
9	30	A/C-Heater Blower Motor Relay Coil, A/C Clutch
10	5	Instrument Illumination
11	15	Radio and Clock
12	30 c.b.	Power Door Lock, All Wheel Drive, Power Tailgate Window (Bronco Only)
13	—	(Not Used)
14	30 c.b.	Power Windows
15	10	Fuel Tank Selector (Diesel Only)
16	30	Horn, Cigar Lighter and Speed Control
17	20	Anti-lock Brakes
18	15	Instrument Cluster Gauges and Indicators, Warning Chime, Diesel Warning Indicators and IMS/EVL Module

12-1 CHARGING SYSTEM

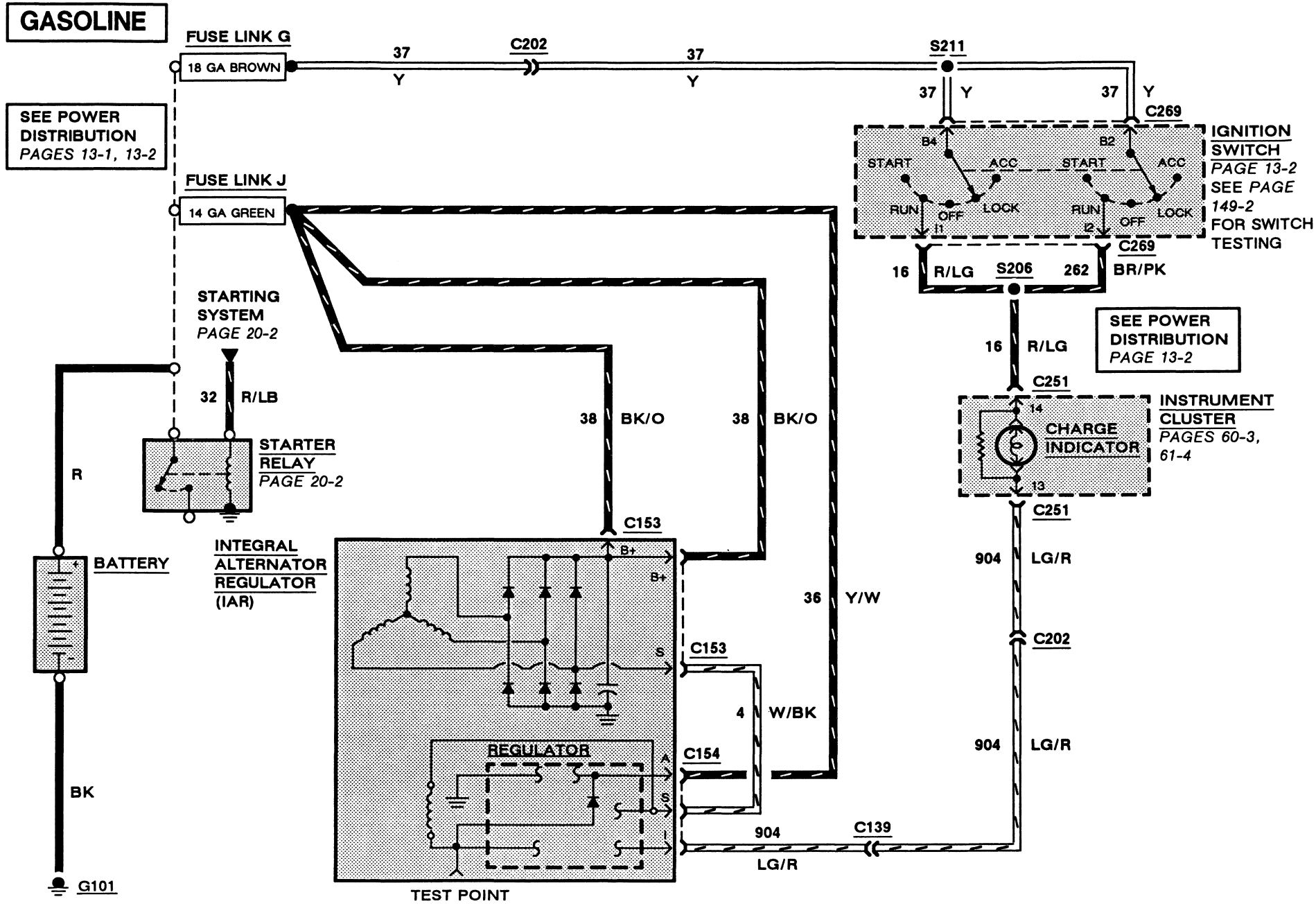

DIESEL

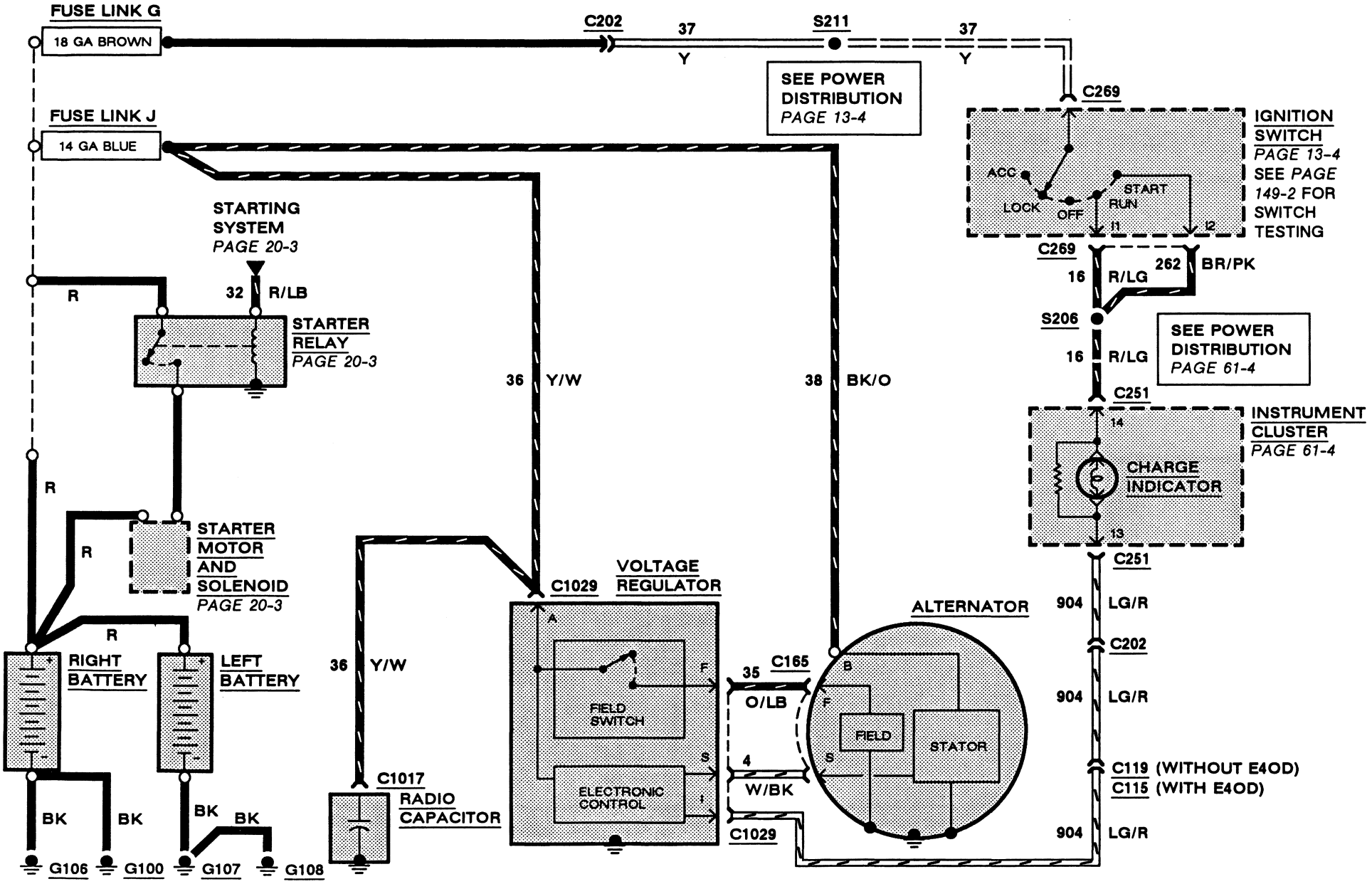
FUSE LINK G
18 GA BROWN
C202
37
Y
S211
37
Y
SEE POWER DISTRIBUTION PAGE 13-4
C269
IGNITION SWITCH PAGE 13-4 SEE PAGE 149-2 FOR SWITCH TESTING
ACC
LOCK
OFF
START
RUN
I1
I2
FUSE LINK J
14 GA BLUE
STARTING SYSTEM PAGE 20-3
32
R/LB
R
STARTER RELAY PAGE 20-3
C269
16
R/LG
262
BR/PK
S206
16
R/LG
SEE POWER DISTRIBUTION PAGE 61-4
36
Y/W
38
BK/O
C251
INSTRUMENT CLUSTER PAGE 61-4
14
CHARGE INDICATOR
13
R
STARTER MOTOR AND SOLENOID PAGE 20-3
C251
C1029
VOLTAGE REGULATOR
ALTERNATOR
904
LG/R
C202
R
RIGHT BATTERY
LEFT BATTERY
36
Y/W
A
F
FIELD SWITCH
S
ELECTRONIC CONTROL
I
35
C165
O/LB
4
W/BK
C1029
B
F
FIELD
STATOR
S
904
LG/R
C119 (WITHOUT E4OD)
C115 (WITH E4OD)
BK
BK
BK
BK
C1017
RADIO CAPACITOR
904
LG/R
G106
G100
G107
G108

12-3 CHARGING SYSTEM

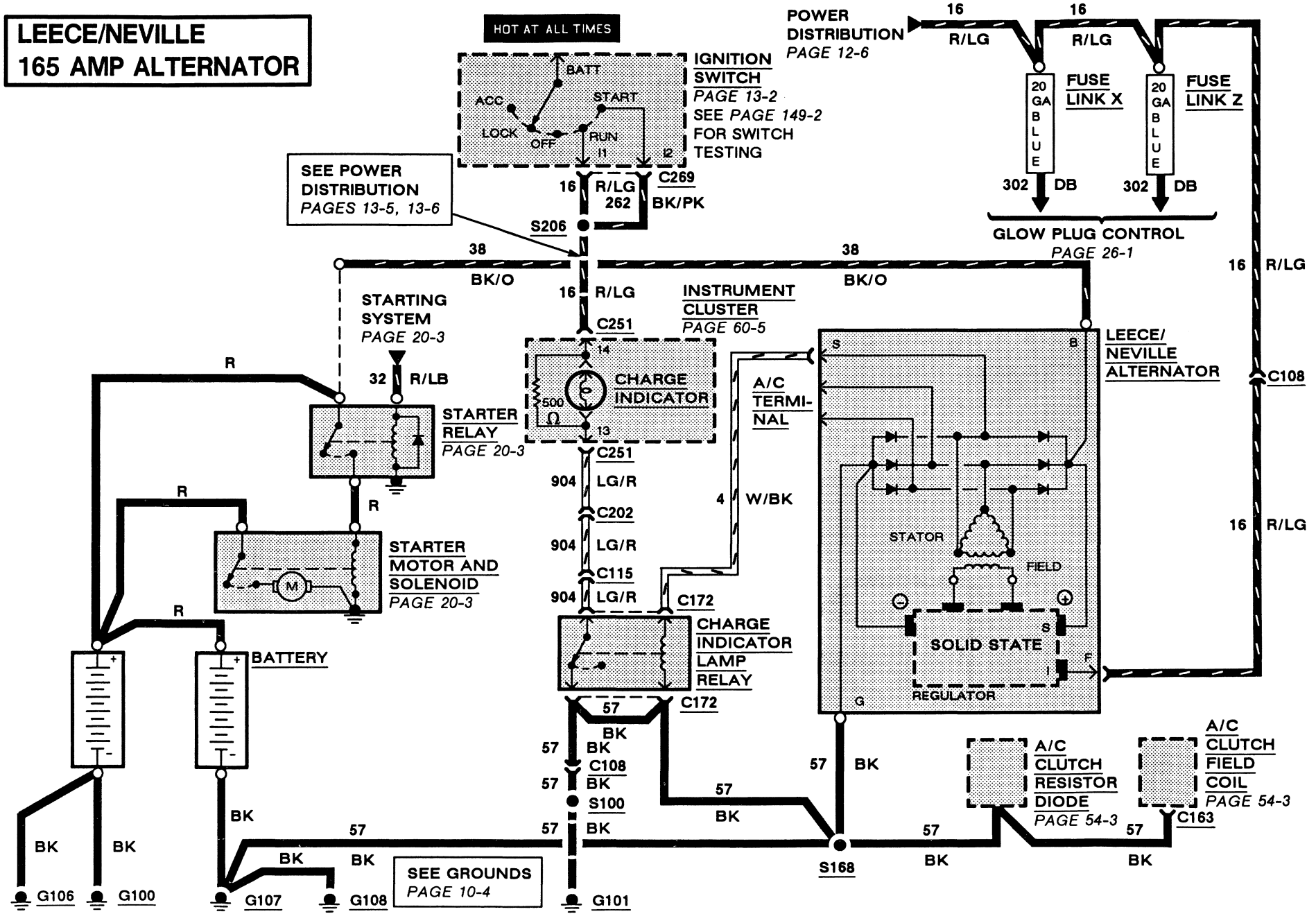

Component	Connector	Location	Page Zone	Connector Page
A/C Clutch Field Coil (4.9L)	C163	LH front of engine	151- 2- F6	
A/C Clutch Field Coil (5.0L)(5.8L)	C163	LH front of engine	151- 3-D10	
A/C Clutch Field Coil (7.3L)	C163	LH front of engine	151- 5- D9	
A/C Clutch Field Coil (7.5L)	C163	Front LH side of engine	151- 8- F7	
A/C Clutch Resistor Diode		LH side of engine compartment, taped to harness, near C113.	★	
Alternator	C165	Top RH front of engine	151- 9- D2	
Charge Indicator Lamp Relay	C172	On RH fender apron, behind starter relay	151- 9- C9	
Fuse Link G		Front of RH fender apron, in engine harness	151- 6- E1	
Fuse Link J (4.9L)		Front of RH fender apron, at starter relay	151- 2- D1	
Fuse Link J (5.0L)(5.8L)		Front of RH fender apron, at starter relay	151- 4- D2	
Fuse Link J (7.3L)		Front of RH fender apron, at starter relay	151- 6- D1	
Fuse Link J (7.5L)		Front of RH fender apron, in engine harness	151- 7- D1	
Fuse Link X		RH side of engine compartment, near blower motor	151- 5- C2	
Fuse Link Z		RH side of engine compartment, near blower motor	151- 5- C2	
Ignition Switch	C269	Top RH side of steering column	151- 10- F6	150-10
Instrument Cluster (Diesel Engine)	C250, C251	Top LH side of I/P	151- 10- A8	150-12
Instrument Cluster (Gasoline Engines)	C250, C251	Top LH side of I/P	151- 10- A8	150-11
Integral Alternator Regulator (IAR) (4.9L)	C153, C154	Front RH side of engine	151- 2- D1	150-10
Integral Alternator Regulator (IAR) (5.0L)(5.8L)	C153, C154	Front RH side of engine	151- 4- F5	150-10
Integral Alternator Regulator (IAR) (7.5L)	C153, C154	Front RH side of engine	151- 8- D1	150-10
Leece/Neville Alternator	C1050, C1051	Front RH side of engine	151- 9- D2	
Radio Capacitor (4.9L)	C1017	LH side of engine, near ignition coil	151- 1- F5	
Starter Motor And Solenoid		Lower RH side of engine	★	
Starter Relay (4.9L)		Front of RH fender apron	151- 2- C1	
Starter Relay (5.0L)(5.8L)		Front of RH fender apron	151- 4- D2	
Starter Relay (7.3L)		Front of RH fender apron	151- 6- D1	
Starter Relay (7.5L)		Front of RH fender apron	151- 7- C1	
Voltage Regulator	C1029	RH side of engine compartment, near starter relay	151- 9- F5	
C153 (4.9L)		RH front of engine, on integral alternator regulator (IAR)	151- 2- F4	150-10
C153 (5.0L)(5.8L)		RH front of engine, on integral alternator regulator (IAR)	151- 4- F4	150-10
C153 (7.5L)		RH front of engine, on integral alternator regulator (IAR)	151- 8- F5	150-10

★ No Figure Available

12-5 CHARGING SYSTEM

Component	Connector	Location	Page Zone	Connector Page
C154 (4.9L)		RH front of engine, on integral alternator regulator (IAR)	151- 2- F5	150-10
C154 (5.0L) (5.8L)		RH front of engine, on integral alternator regulator (IAR)	151- 4- F4	150-10
C154 (7.5L)		RH front of engine, on integral alternator regulator (IAR)	151- 8- F4	150-10
C251 (Diesel Engine)		Behind top LH side of I/P, on instrument cluster	151- 10- A8	150-12
C251 (Gasoline Engines)		Behind top LH side of I/P, on instrument cluster	151- 10- A8	150-11

★ No Figure Available

Refer to Location Index, Cell 152, for Base Part Number information and Connector, Splice, Ground, Resistor and Diode locations.

HOW THE CIRCUIT WORKS

With Internal Regulator

The Alternator is belt-driven by the engine and generates power to keep the Battery fully charged and to operate electrical systems in the vehicle.

Alternator output is variable and depends on the speed at which the alternator rotor spins, as well as the amount of current passing through the rotor winding. Current flow through the rotor winding is controlled by a regulator that is built into the Alternator.

The Alternator actually generates alternating current, which is passed through a series of rectifier diodes and converted to direct current.

Without Internal Regulator

The Battery, Alternator and Voltage Regulator make up the Charging System. With the Ignition Switch in RUN, battery voltage is applied through the solid-state electronic control of the Voltage Regulator. The electronic control applies battery voltage to the Alternator field.

With current in the field and the rotor turning, the Alternator stator produces a DC voltage at B+ terminals (to Battery). If the Alternator output voltage is greater than the Battery terminal voltage, current will flow from the Alternator to the Battery, as well as to the vehicle electrical load.

If the Alternator voltage is less than the battery terminal voltage, current will flow from the Battery to supplement the alternator output in supplying the vehicle electrical load.

Charge Indicator

With the Ignition Switch in START or RUN, battery voltage is present at the Charge Indicator through the METER Fuse.

If the Alternator is not generating power, the Regulator inside the Alternator grounds the Charge Indicator through circuit 904 (LG/R). The Charge Indicator illuminates.

When the Alternator is generating power, the Regulator inside the Alternator applies battery voltage to the Charge Indicator through circuit 904 (LG/R). With battery voltage present at both ends of the Charge Indicator, there is no current flow and the Charge Indicator does not illuminate.

For further diagnostic information, refer to section 31-01 of the shop manual.

TROUBLESHOOTING HINTS

CONDITION	POSSIBLE CAUSE	ACTION
• Battery doesn't stay charged.	• Open or poor connection at Alternator output.	• Check that connectors or terminals on Alternator and Engine Compartment Fuse Box are clean and tight. • Check Fuse Link G.
• Charge Indicator is always on.	• Loose alternator drive belt. • Corroded battery terminals. • Inoperative Voltage Regulator.	• Check alternator drive belt tension. • Check that battery post terminals are clean. Check that terminals on battery posts cannot be easily turned by hand. • Refer to Section 31-01 of the Shop Manual for alternator testing procedures.

GASOLINE

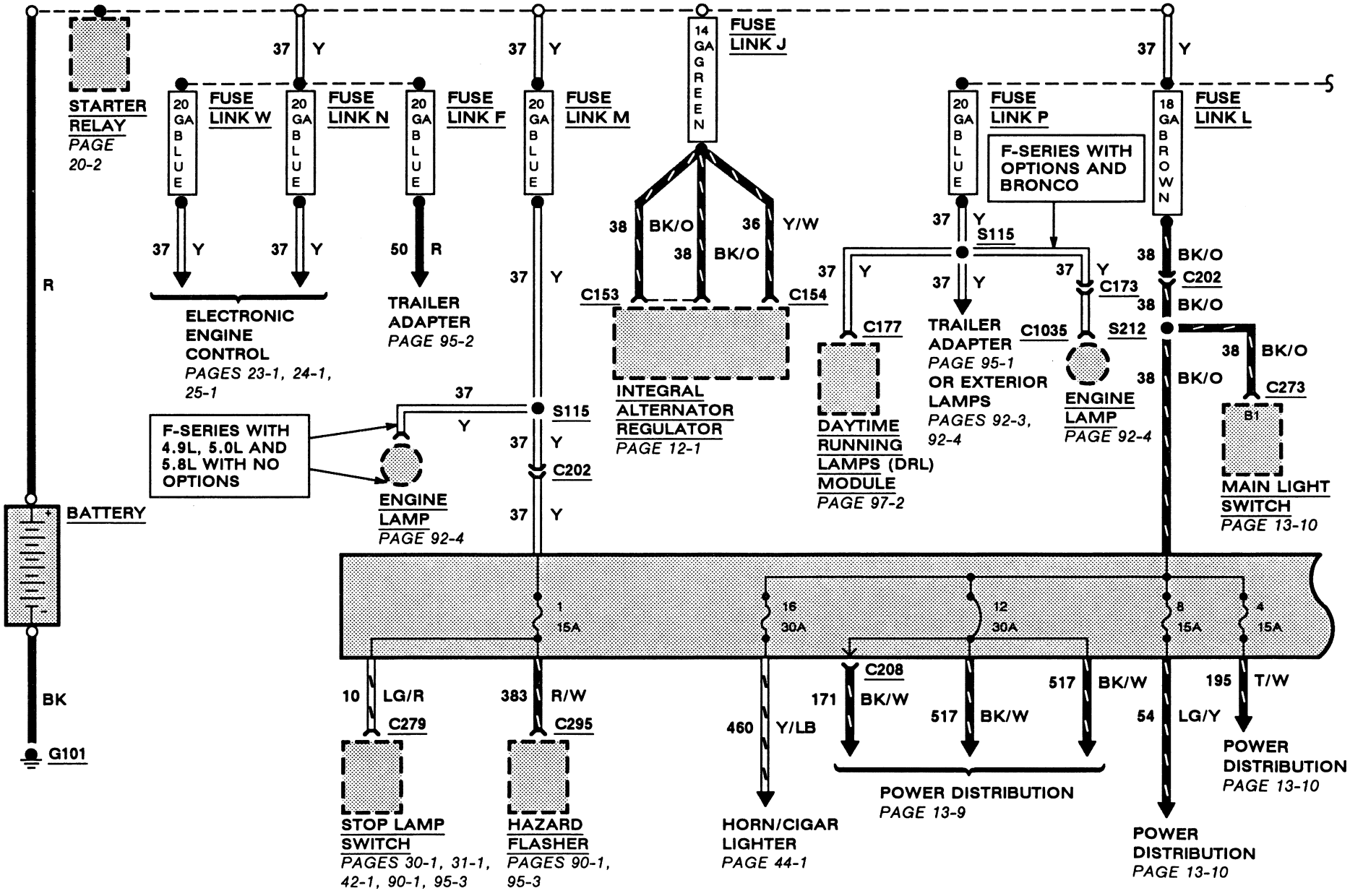
STARTER RELAY
PAGE 20-2
FUSE LINK W
FUSE LINK N
FUSE LINK F
FUSE LINK M
FUSE LINK J
FUSE LINK P
FUSE LINK L
20 GA BLUE
14 GA GREEN
18 GA BROWN
F-SERIES WITH OPTIONS AND BRONCO
ELECTRONIC ENGINE CONTROL
PAGES 23-1, 24-1, 25-1
TRAILER ADAPTER
PAGE 95-2
INTEGRAL ALTERNATOR REGULATOR
PAGE 12-1
TRAILER ADAPTER
PAGE 95-1
OR EXTERIOR LAMPS
PAGES 92-3, 92-4
ENGINE LAMP
PAGE 92-4
DAYTIME RUNNING LAMPS (DRL) MODULE
PAGE 97-2
MAIN LIGHT SWITCH
PAGE 13-10
F-SERIES WITH 4.9L, 5.0L AND 5.8L WITH NO OPTIONS
BATTERY
G101
STOP LAMP SWITCH
PAGES 30-1, 31-1, 42-1, 90-1, 95-3
HAZARD FLASHER
PAGES 90-1, 95-3
HORN/CIGAR LIGHTER
PAGE 44-1
POWER DISTRIBUTION
PAGE 13-9
POWER DISTRIBUTION
PAGE 13-10
POWER DISTRIBUTION
PAGE 13-10
S115
S212
C153
C154
C173
C177
C1035
C202
C208
C273
C279
C295
B1
1 15A
16 30A
12 30A
8 15A
4 15A
R
BK
10 LG/R
383 R/W
460 Y/LB
171 BK/W
517 BK/W
517 BK/W
54 LG/Y
195 T/W
38 BK/O
36 Y/W
37 Y
50 R

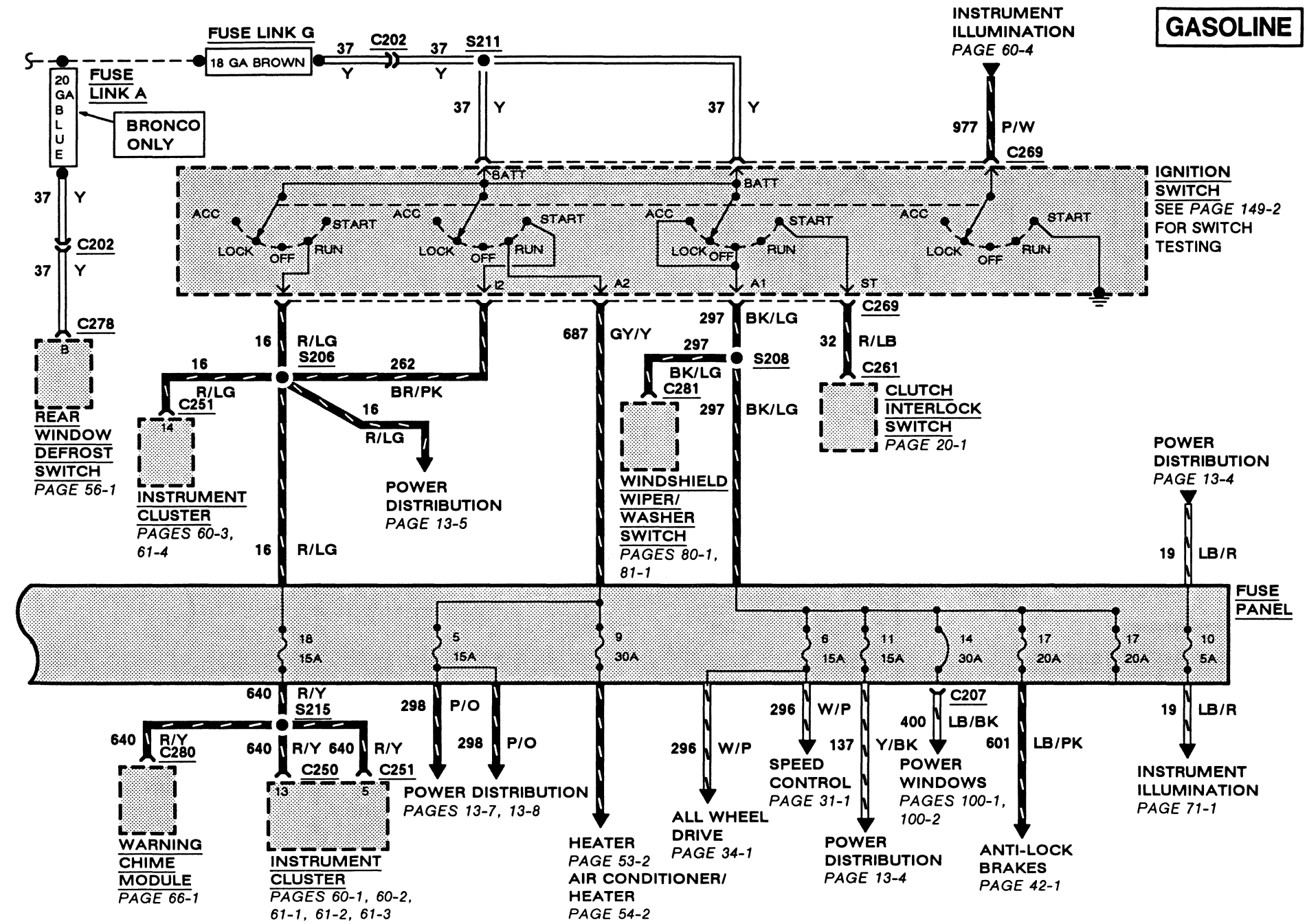
GASOLINE
FUSE LINK G
18 GA BROWN
37 Y
C202
37 Y
S211
37 Y
37 Y
INSTRUMENT ILLUMINATION
PAGE 60-4
977 P/W
C269
FUSE LINK A
20 GA BLUE
BRONCO ONLY
37 Y
C202
37 Y
C278
B
REAR WINDOW DEFROST SWITCH
PAGE 56-1
BATT
ACC
START
LOCK
OFF
RUN
I2
A2
A1
ST
IGNITION SWITCH
SEE PAGE 149-2 FOR SWITCH TESTING
16 R/LG
S206
262 BR/PK
16 R/LG
C251
14
INSTRUMENT CLUSTER
PAGES 60-3, 61-4
16 R/LG
POWER DISTRIBUTION
PAGE 13-5
16 R/LG
687 GY/Y
297 BK/LG
297 BK/LG
C281
WINDSHIELD WIPER/ WASHER SWITCH
PAGES 80-1, 81-1
297 BK/LG
S208
C269
32 R/LB
C261
CLUTCH INTERLOCK SWITCH
PAGE 20-1
POWER DISTRIBUTION
PAGE 13-4
19 LB/R
FUSE PANEL
18 15A
5 15A
9 30A
6 15A
11 15A
14 30A
17 20A
17 20A
10 5A
640 R/Y
S215
640 R/Y
C280
WARNING CHIME MODULE
PAGE 66-1
640 R/Y 640 R/Y
C250
C251
13
5
INSTRUMENT CLUSTER
PAGES 60-1, 60-2, 61-1, 61-2, 61-3
298 P/O
298 P/O
POWER DISTRIBUTION
PAGES 13-7, 13-8
HEATER
PAGE 53-2
AIR CONDITIONER/ HEATER
PAGE 54-2
296 W/P
ALL WHEEL DRIVE
PAGE 34-1
296 W/P
SPEED CONTROL
PAGE 31-1
137 Y/BK
POWER DISTRIBUTION
PAGE 13-4
400 LB/BK
C207
POWER WINDOWS
PAGES 100-1, 100-2
601 LB/PK
ANTI-LOCK BRAKES
PAGE 42-1
19 LB/R
INSTRUMENT ILLUMINATION
PAGE 71-1

DIESEL

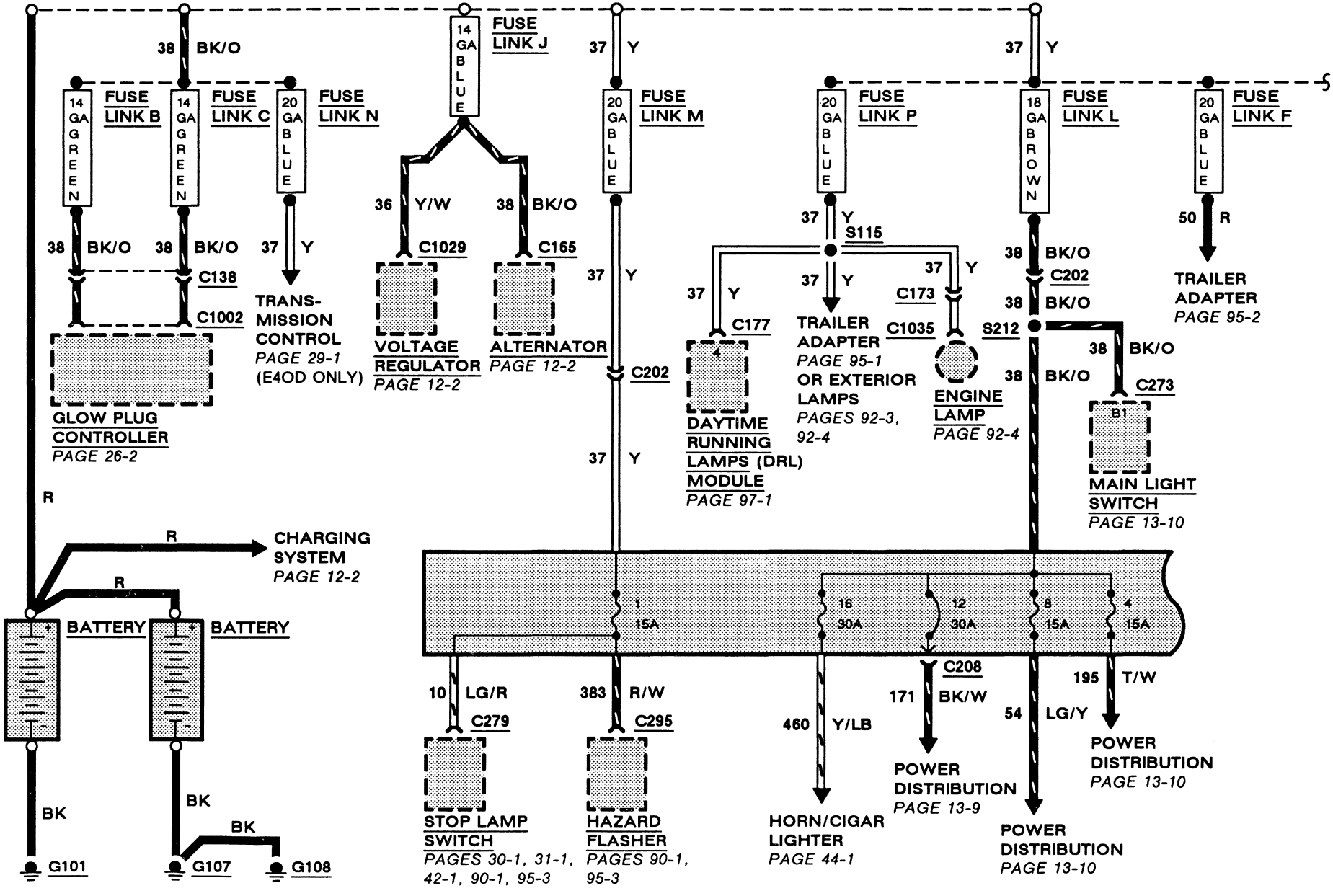
38 BK/O
14 GA GREEN
FUSE LINK B
14 GA GREEN
FUSE LINK C
20 GA BLUE
FUSE LINK N
14 GA BLUE
FUSE LINK J
37 Y
20 GA BLUE
FUSE LINK M
20 GA BLUE
FUSE LINK P
18 GA BROWN
FUSE LINK L
20 GA BLUE
FUSE LINK F
38 BK/O
38 BK/O
C138
C1002
GLOW PLUG CONTROLLER
PAGE 26-2
37 Y
TRANS-MISSION CONTROL
PAGE 29-1
(E4OD ONLY)
36 Y/W
38 BK/O
C1029
C165
VOLTAGE REGULATOR
PAGE 12-2
ALTERNATOR
PAGE 12-2
37 Y
C202
37 Y
S115
37 Y
C177
DAYTIME RUNNING LAMPS (DRL) MODULE
PAGE 97-1
TRAILER ADAPTER
PAGE 95-1
OR EXTERIOR LAMPS
PAGES 92-3, 92-4
C173
C1035
ENGINE LAMP
PAGE 92-4
38 BK/O
C202
38 BK/O
S212
38 BK/O
C273
MAIN LIGHT SWITCH
PAGE 13-10
50 R
TRAILER ADAPTER
PAGE 95-2
R
R
CHARGING SYSTEM
PAGE 12-2
R
BATTERY
BATTERY
BK
BK
BK
G101
G107
G108
1 15A
16 30A
12 30A
8 15A
4 15A
10 LG/R
C279
STOP LAMP SWITCH
PAGES 30-1, 31-1, 42-1, 90-1, 95-3
383 R/W
C295
HAZARD FLASHER
PAGES 90-1, 95-3
460 Y/LB
HORN/CIGAR LIGHTER
PAGE 44-1
C208
171 BK/W
POWER DISTRIBUTION
PAGE 13-9
54 LG/Y
POWER DISTRIBUTION
PAGE 13-10
195 T/W
POWER DISTRIBUTION
PAGE 13-10

151-1 COMPONENT LOCATION VIEWS

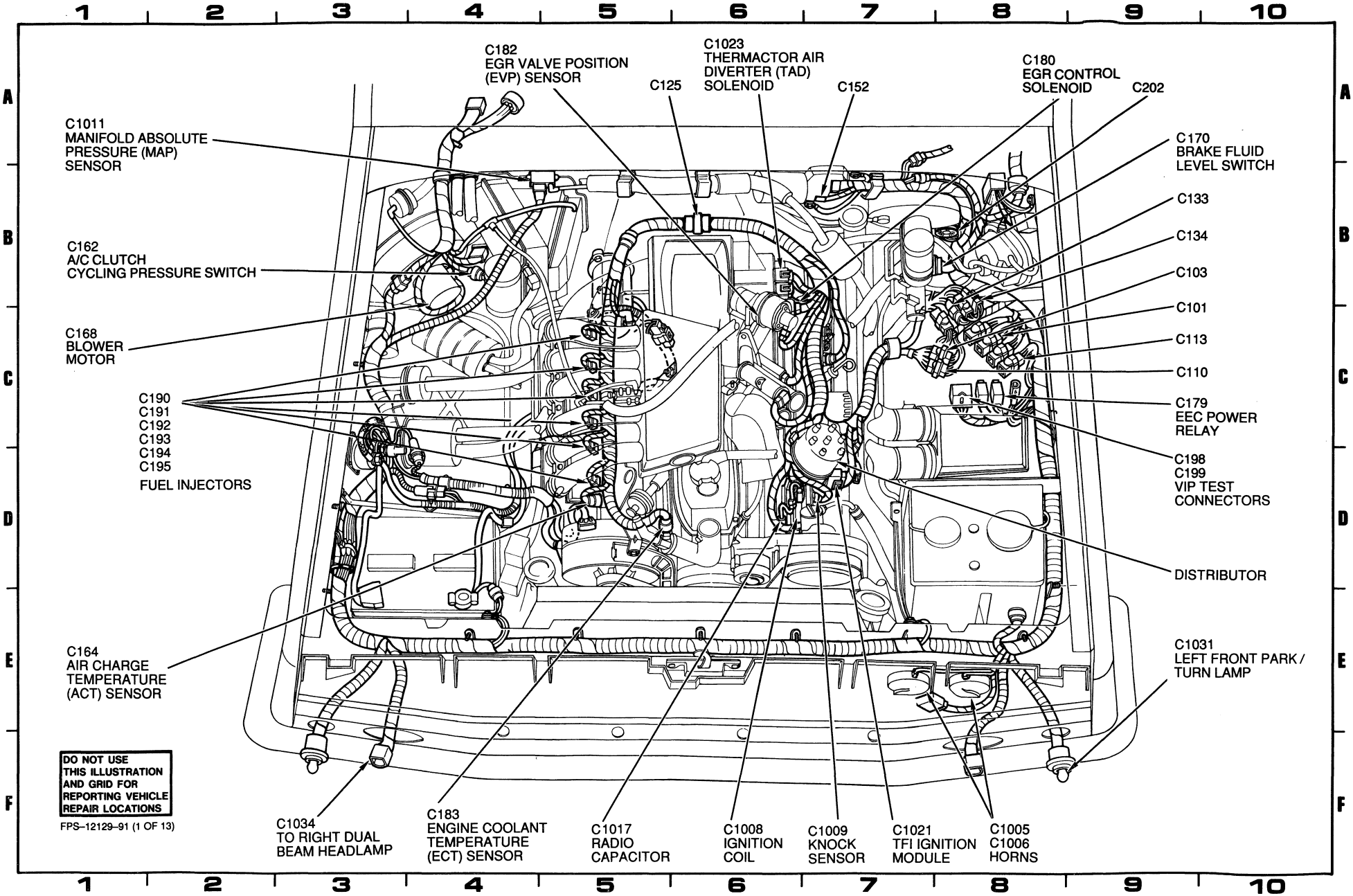

4.9L Engine (1 of 2)

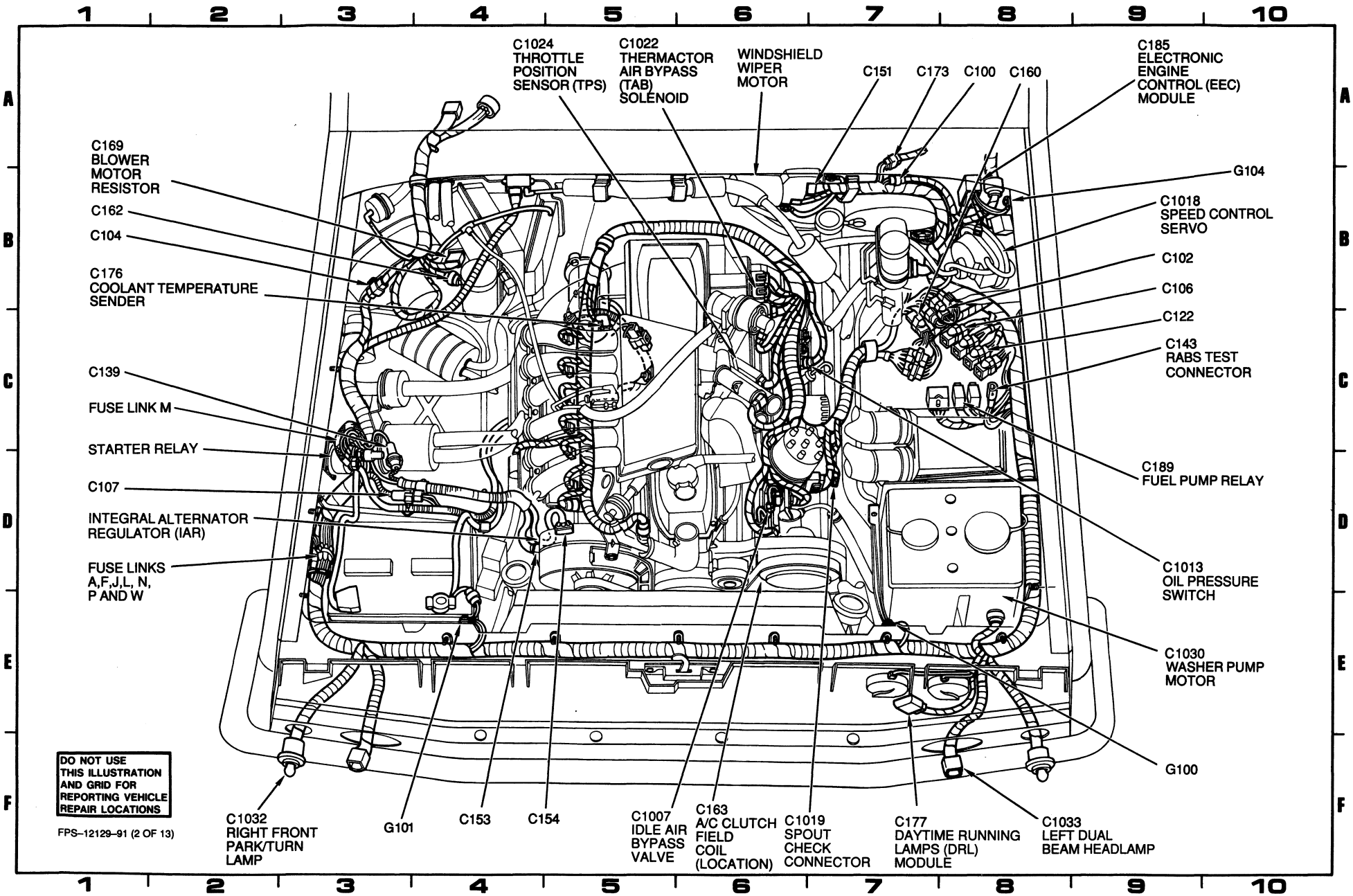

4.9L Engine (2 of 2)

151-3 COMPONENT LOCATION VIEWS

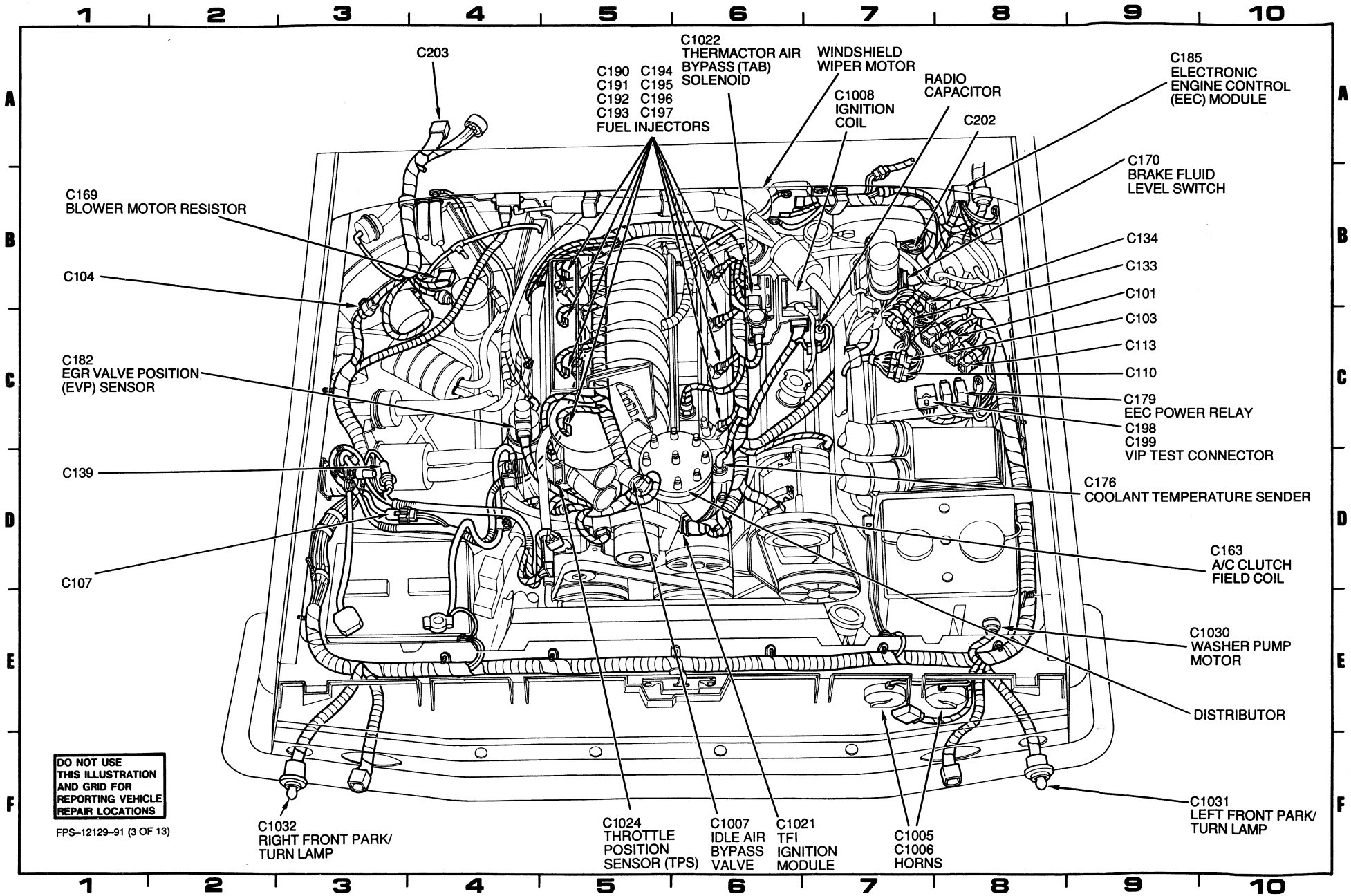

5.0L/5.8L Engine (1 of 2)

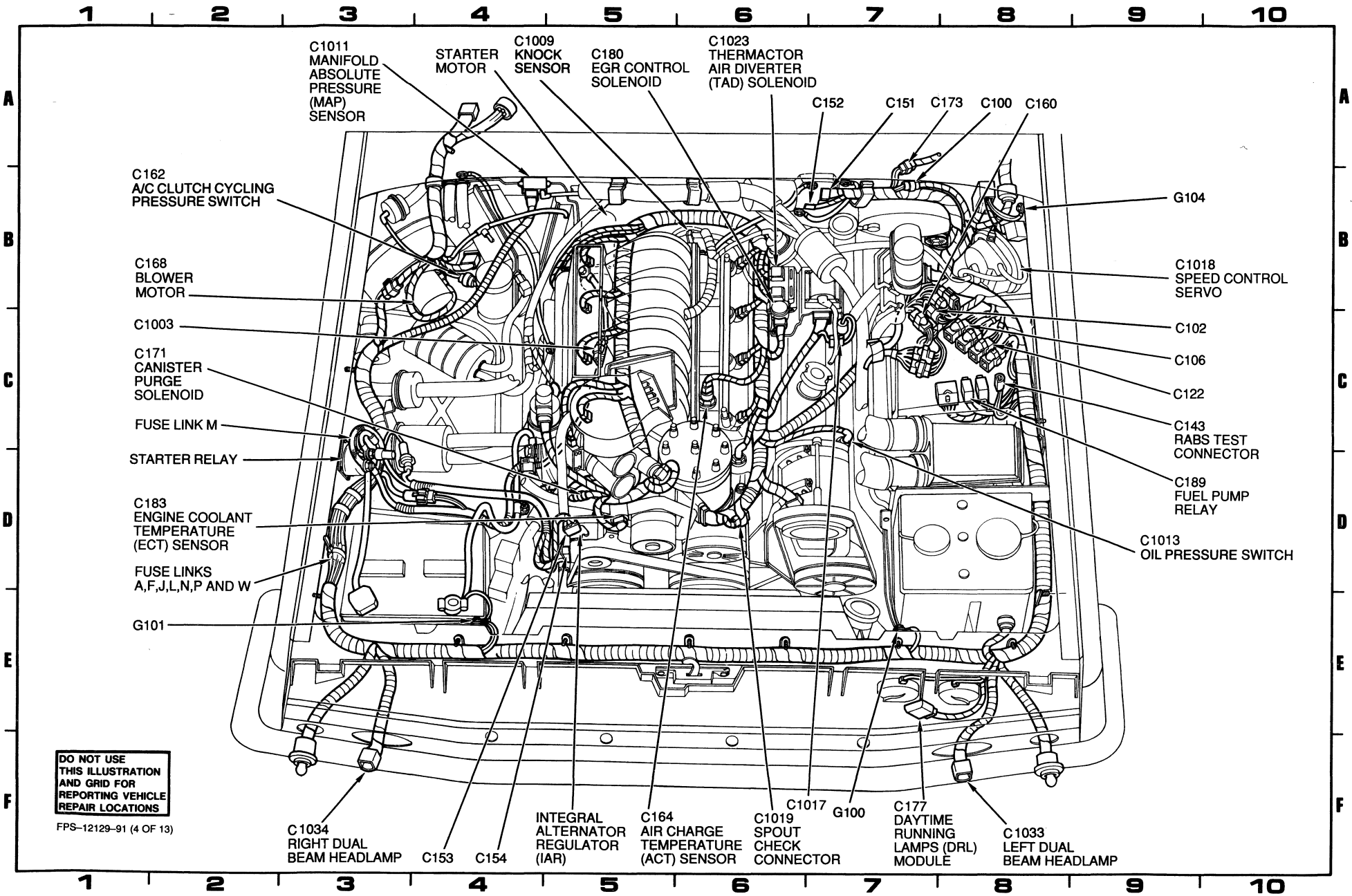

5.0L/5.8L Engine (2 of 2)

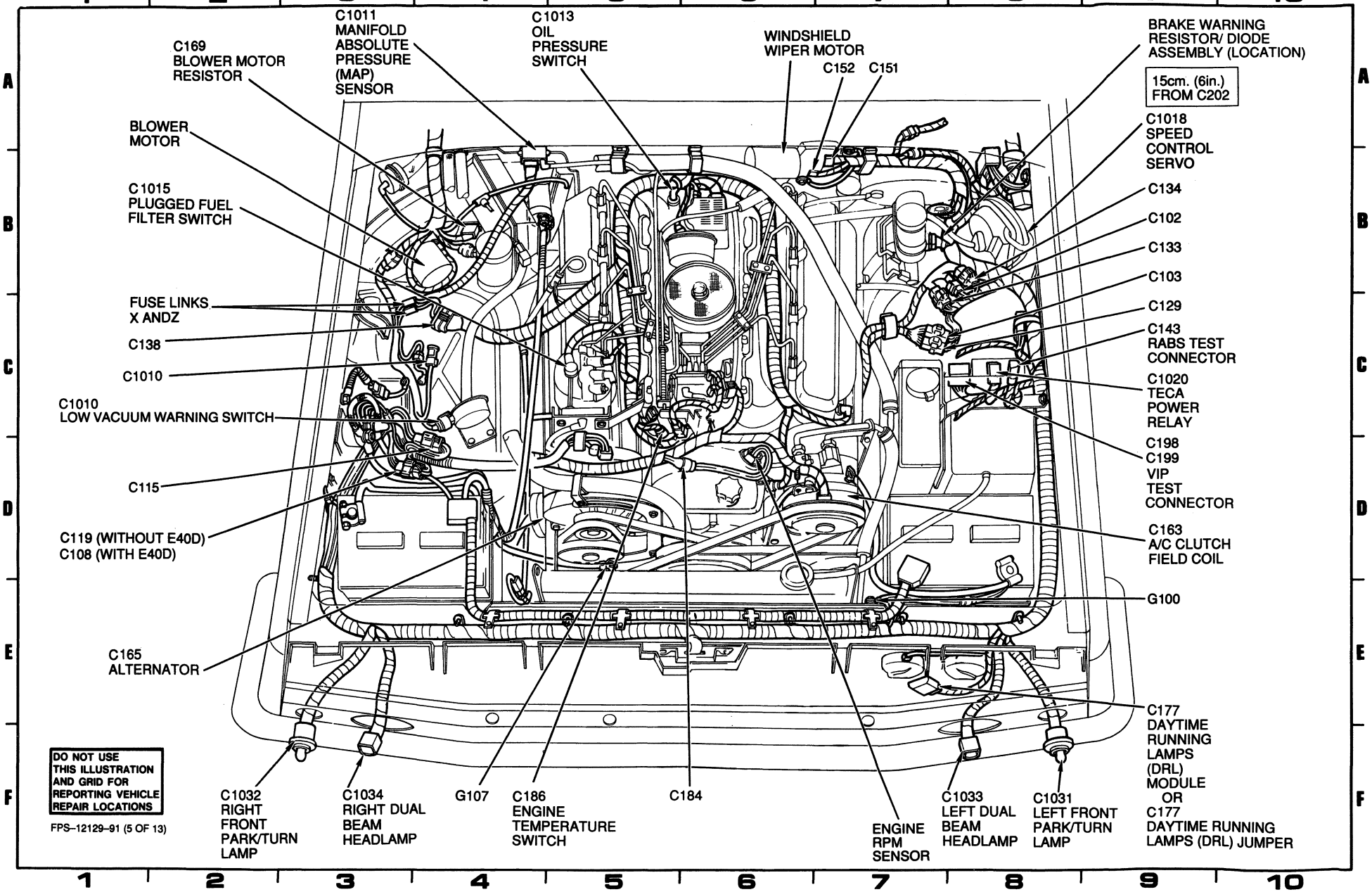

7.3L Diesel Engine (1 of 2)

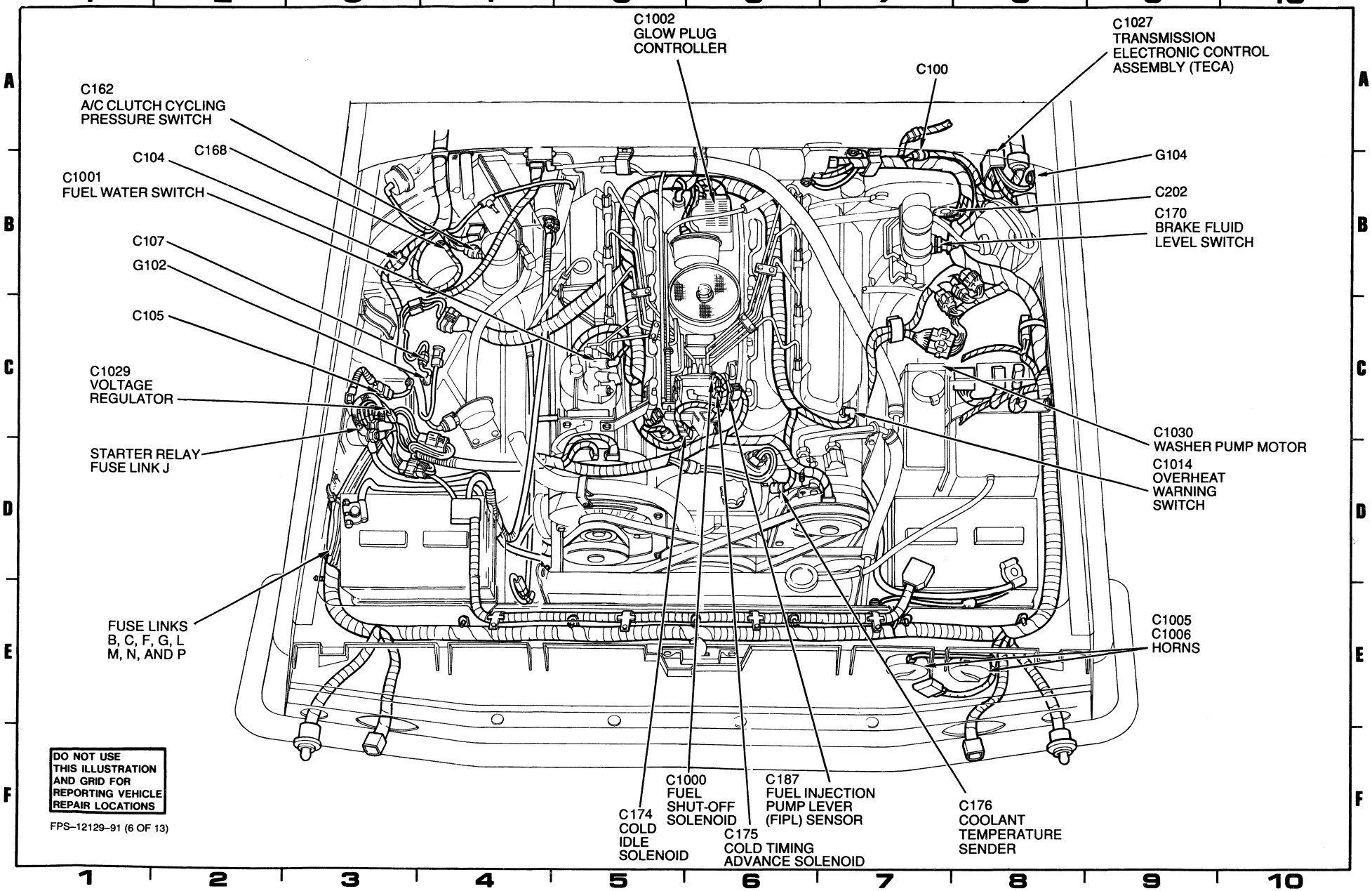

7.3L Diesel Engine (2 of 2)

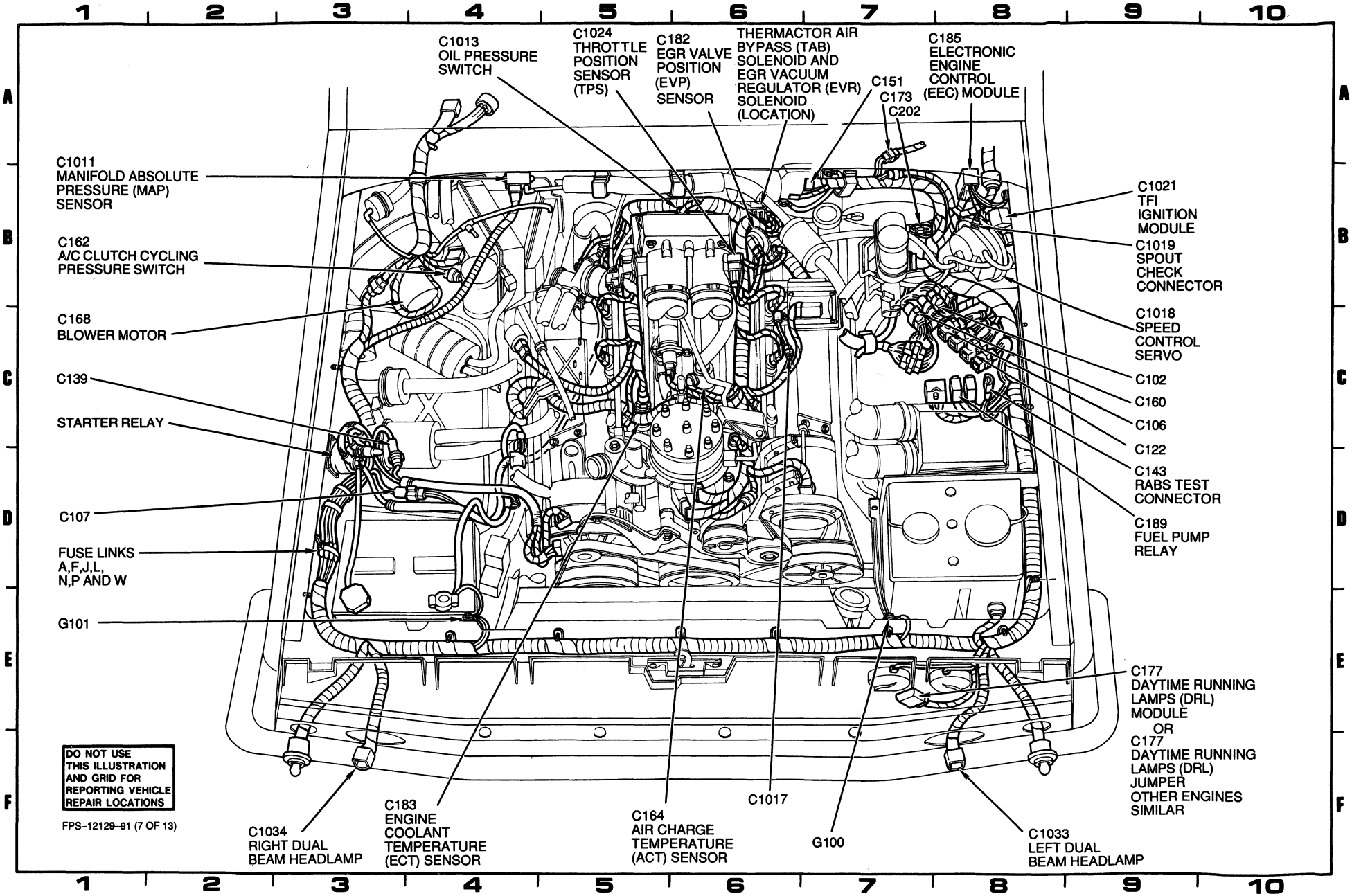

7.5L Engine (1 of 2)

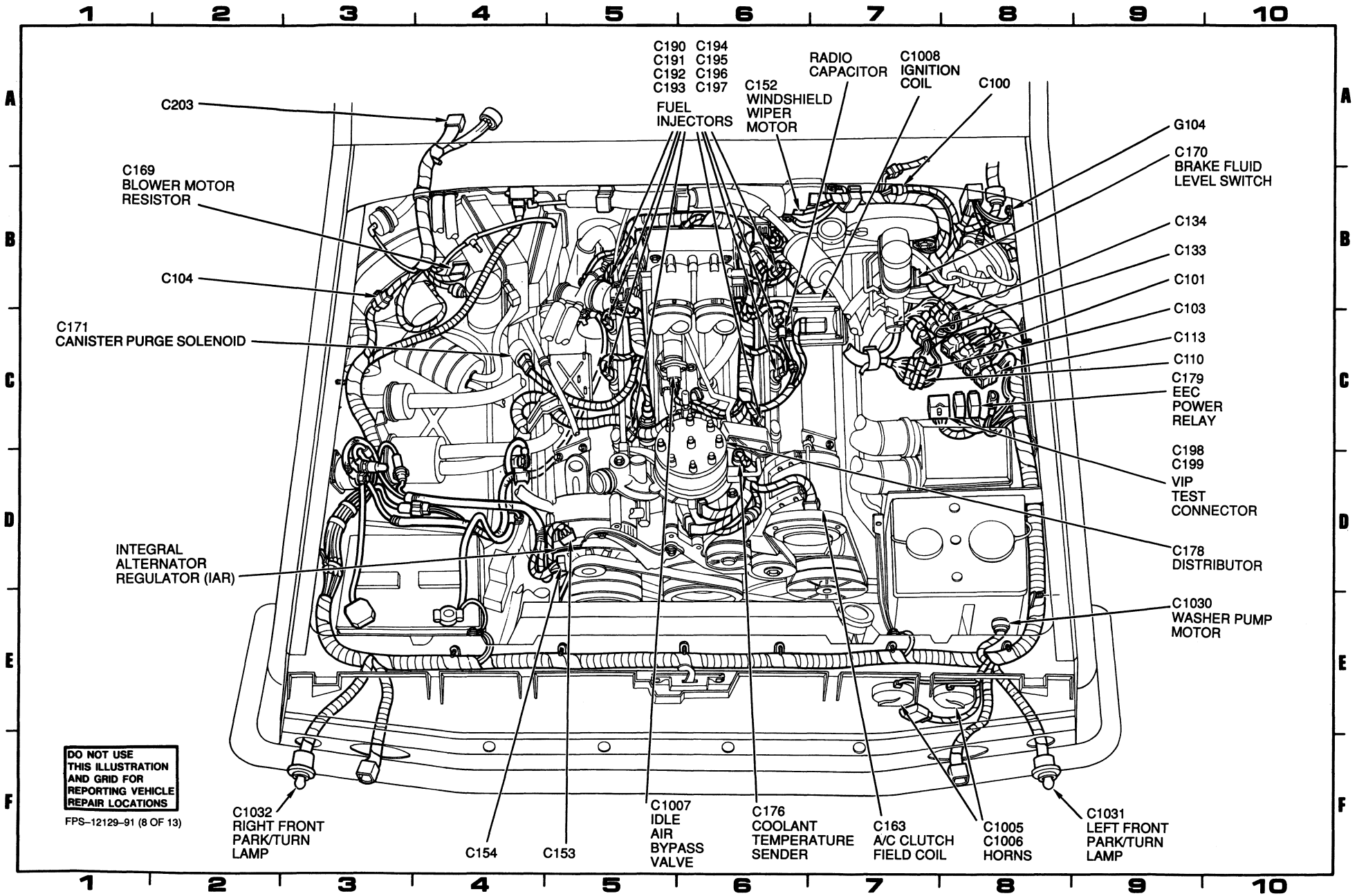

7.5L Engine (2 of 2)

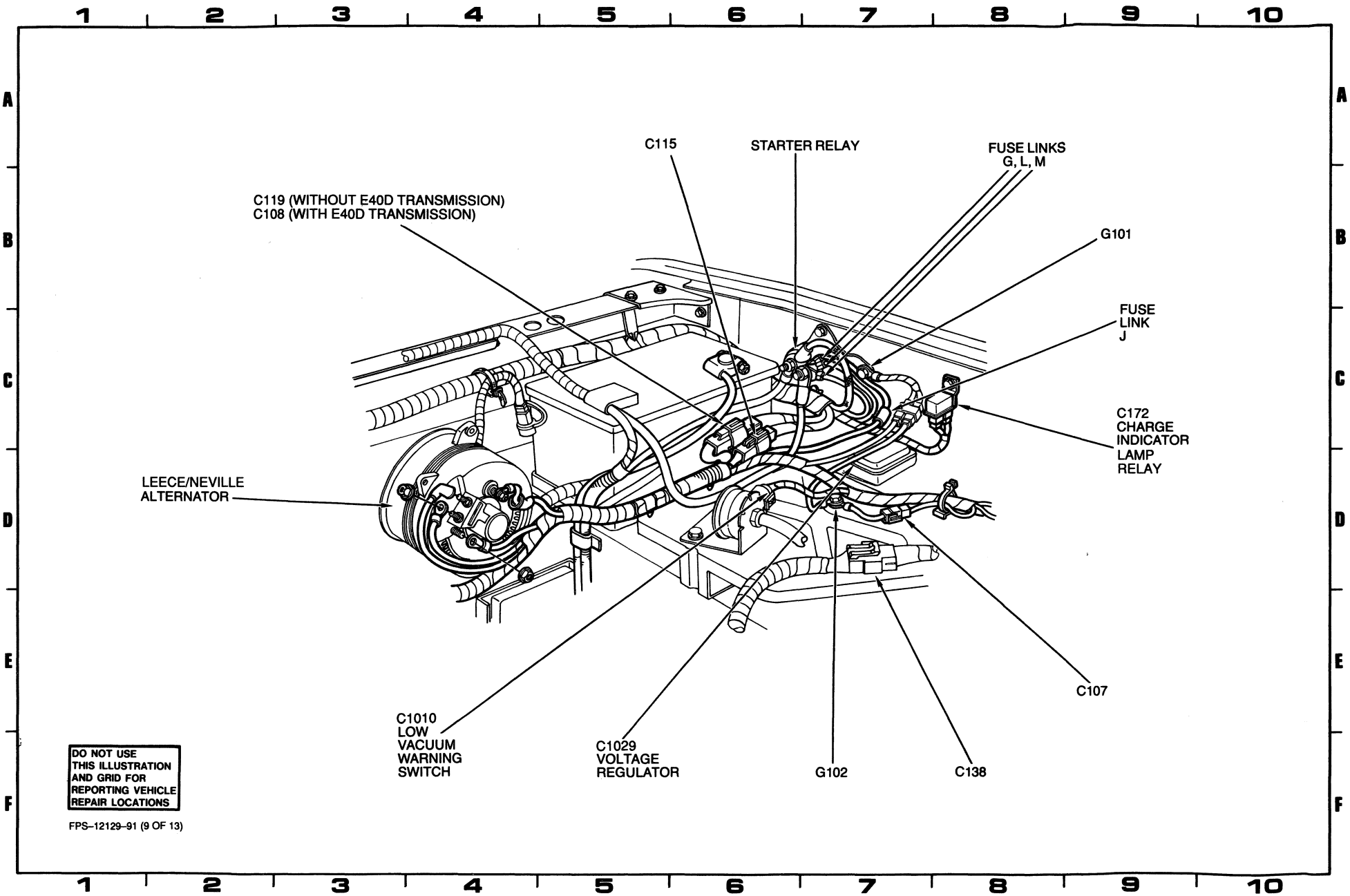

165 Amp Alternator

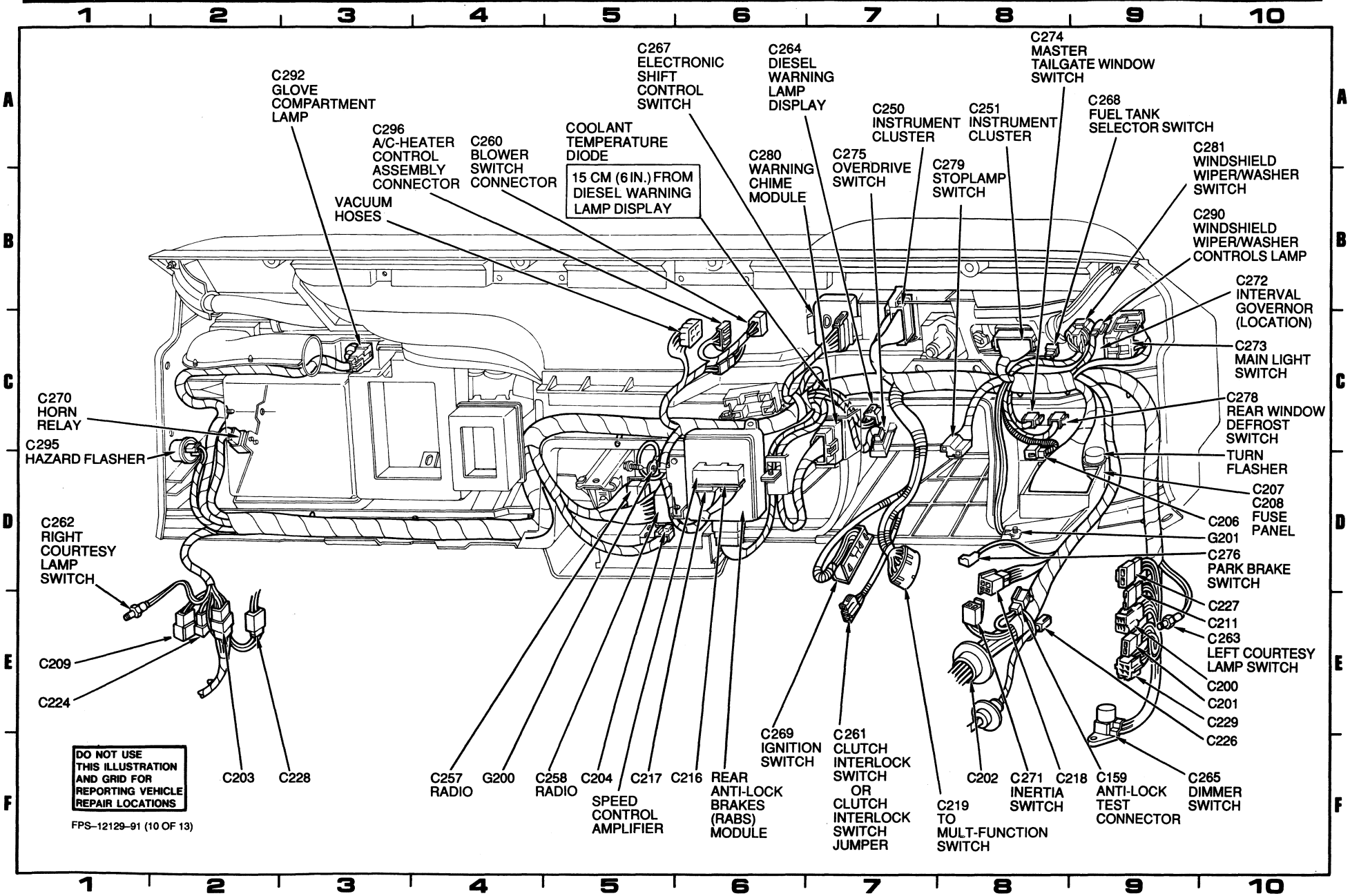
C292 GLOVE COMPARTMENT LAMP
C296 A/C-HEATER CONTROL ASSEMBLY CONNECTOR
C260 BLOWER SWITCH CONNECTOR
VACUUM HOSES
COOLANT TEMPERATURE DIODE
15 CM (6 IN.) FROM DIESEL WARNING LAMP DISPLAY
C267 ELECTRONIC SHIFT CONTROL SWITCH
C264 DIESEL WARNING LAMP DISPLAY
C280 WARNING CHIME MODULE
C275 OVERDRIVE SWITCH
C250 INSTRUMENT CLUSTER
C279 STOPLAMP SWITCH
C251 INSTRUMENT CLUSTER
C274 MASTER TAILGATE WINDOW SWITCH
C268 FUEL TANK SELECTOR SWITCH
C281 WINDSHIELD WIPER/WASHER SWITCH
C290 WINDSHIELD WIPER/WASHER CONTROLS LAMP
C272 INTERVAL GOVERNOR (LOCATION)
C273 MAIN LIGHT SWITCH
C278 REAR WINDOW DEFROST SWITCH
TURN FLASHER
C207 C208 FUSE PANEL
C206
G201
C276 PARK BRAKE SWITCH
C227
C211
C263 LEFT COURTESY LAMP SWITCH
C200
C201
C229
C226
C265 DIMMER SWITCH
C159 ANTI-LOCK TEST CONNECTOR
C218
C271 INERTIA SWITCH
C202
C219 TO MULT-FUNCTION SWITCH
C261 CLUTCH INTERLOCK SWITCH OR CLUTCH INTERLOCK SWITCH JUMPER
C269 IGNITION SWITCH
REAR ANTI-LOCK BRAKES (RABS) MODULE
C216
C217
C204
SPEED CONTROL AMPLIFIER
C258 RADIO
G200
C257 RADIO
C228
C203
C224
C209
C262 RIGHT COURTESY LAMP SWITCH
C295 HAZARD FLASHER
C270 HORN RELAY
DO NOT USE THIS ILLUSTRATION AND GRID FOR REPORTING VEHICLE REPAIR LOCATIONS
FPS–12129–91 (10 OF 13)

Behind I/P

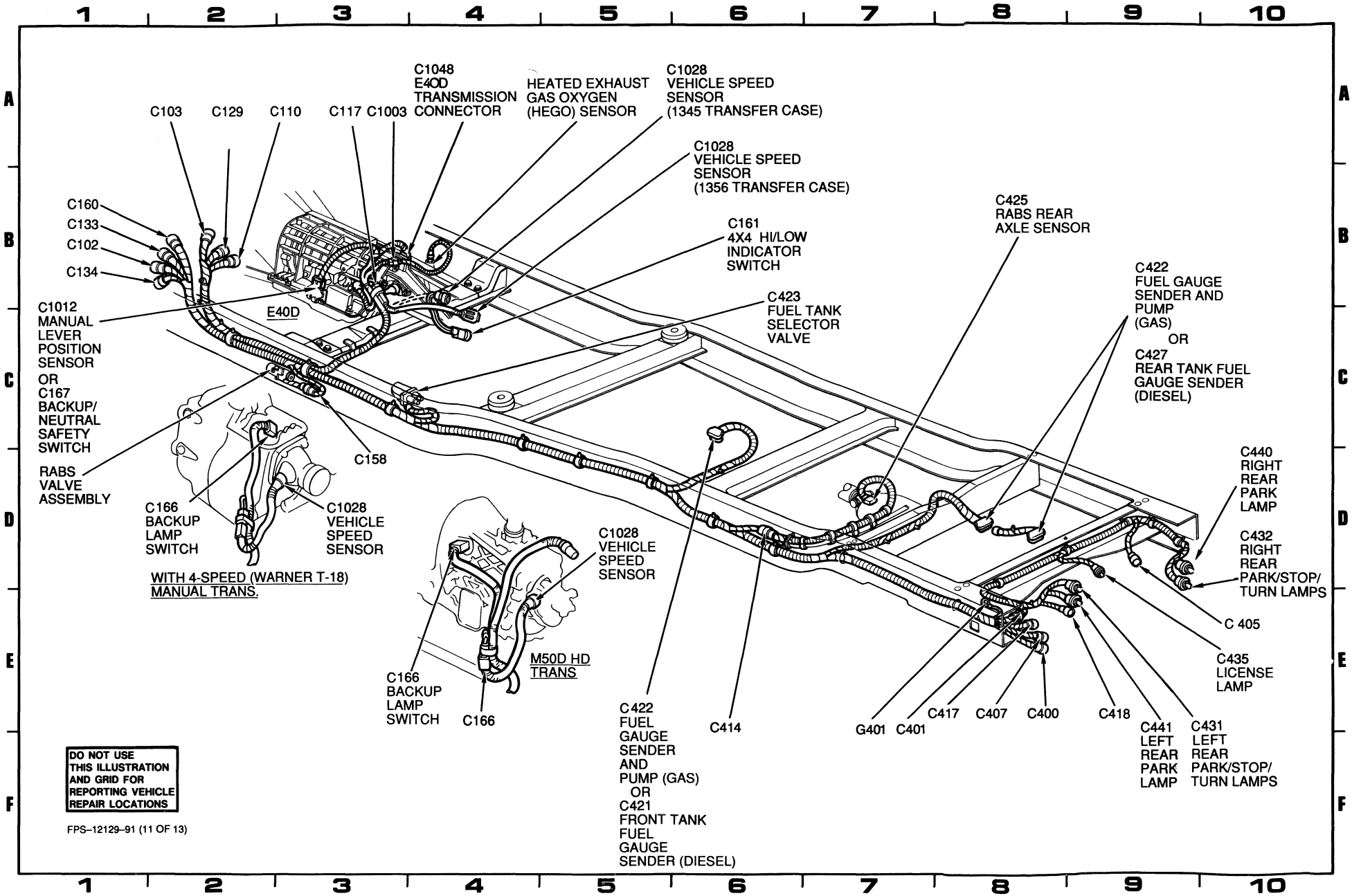

Frame Rail View

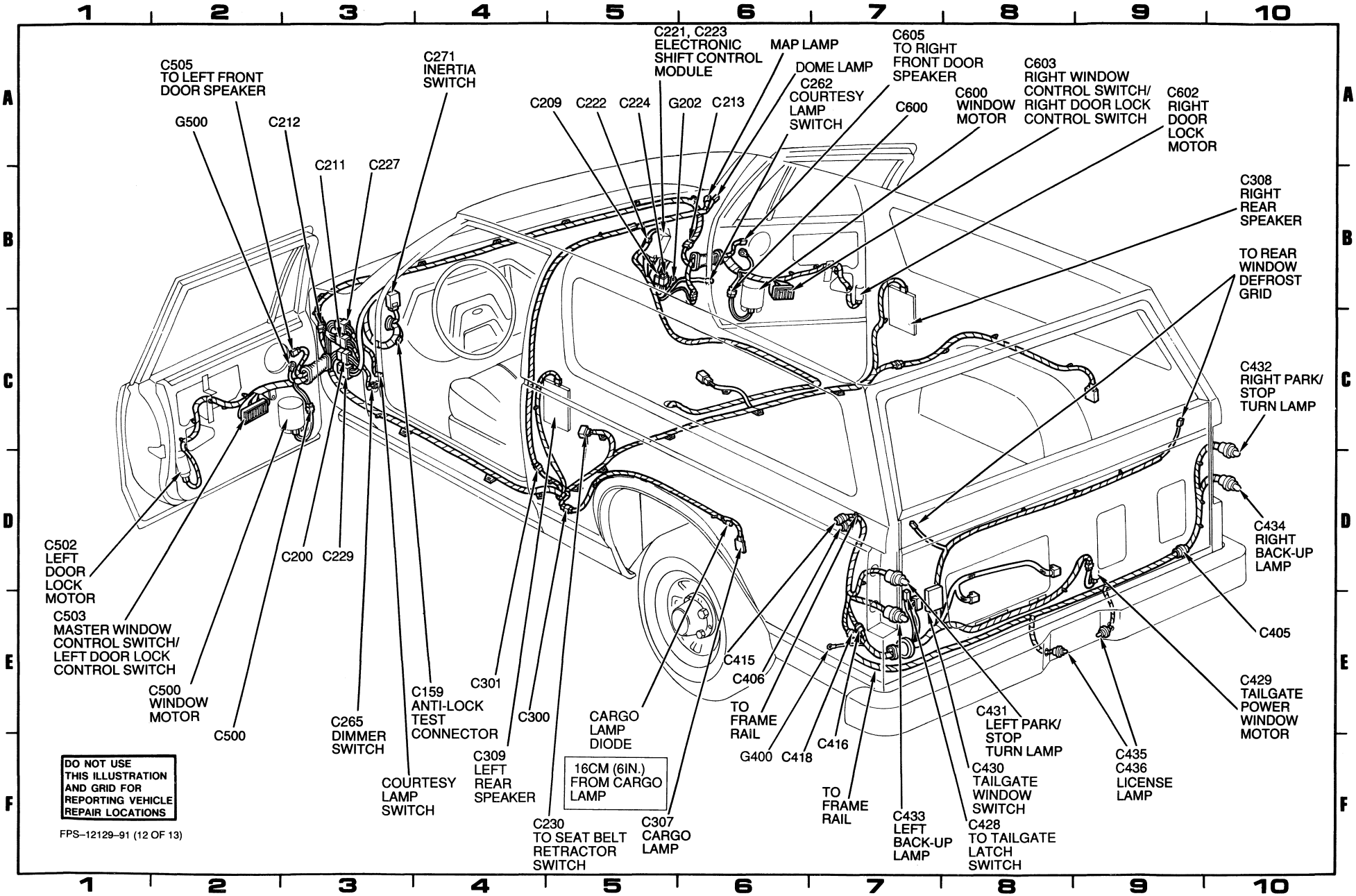

Full Body View (Bronco)

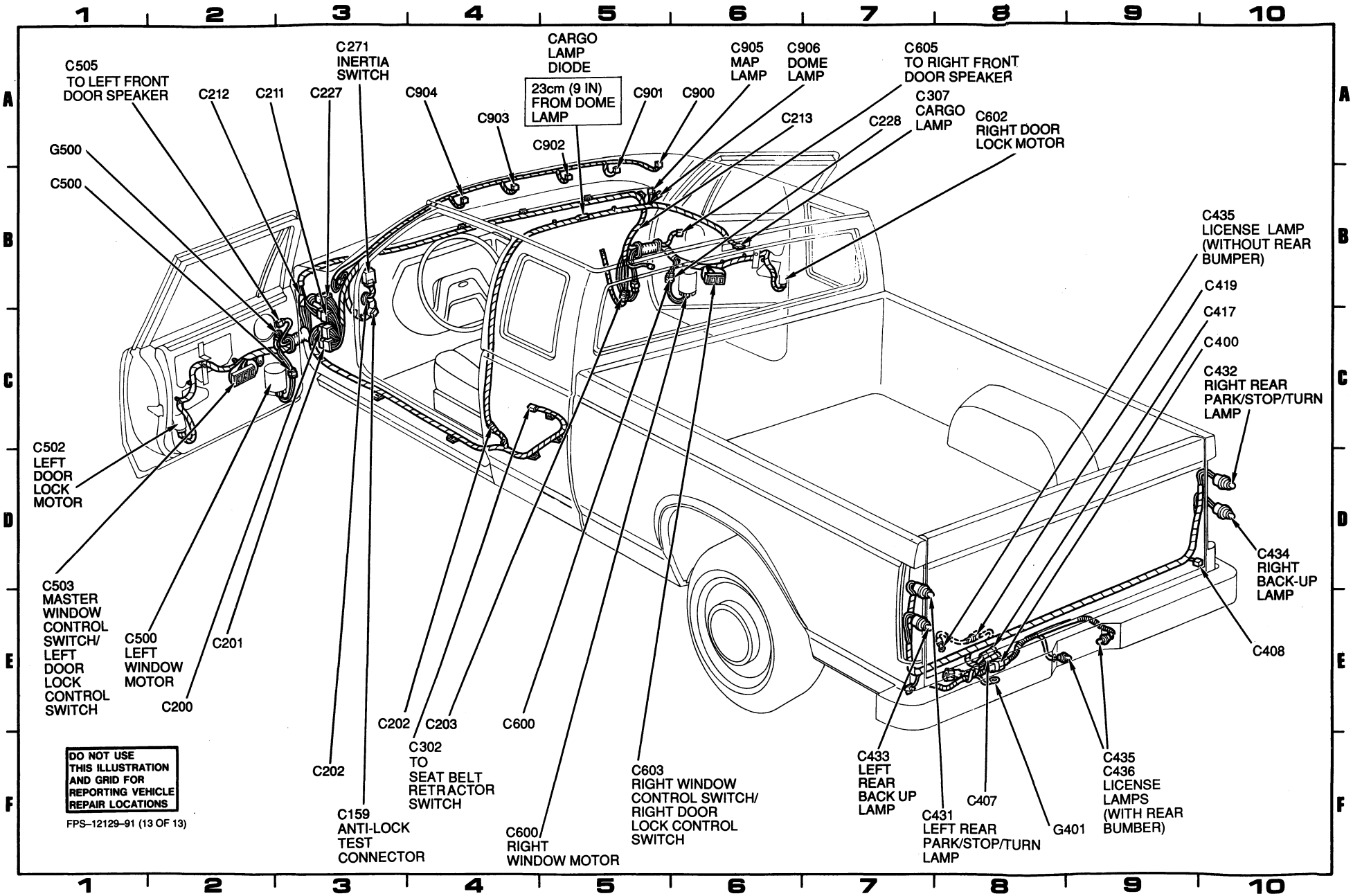

Full Body View (F Series)

152-1 LOCATION INDEX

Base Harness Number	Harness Name	Major Systems
14401	Main	Air Conditioner/Heater
		Anti-lock Brakes
		Courtesy Lamps
		Headlamps
		IMS/EUL Module
		Instrument Panel
		Speed Control
		Radio
		Turn/Stop/Hazard Lamps
		Warning Chime
14405	Rear Lamp	Anti-lock Brakes
		Auxiliary Fuel Tank Selector
		Fuel Tank Sender And Pump
		License Lamps
		Turn/Stop/Hazard Lamps
		Trailer Wiring
14406	Fuel Tank Sender	Fuel Tank Sender
14408	Right Rear Lamp Extension	Backup Lamp
		Rear Park/Stop/Turn Lamps
14630	Window Regulator Right Front Door	Power Door Locks
		Power Window
		Radio
14631	Window Regulator Left Front Door	Power Door Locks
		Power Window
		Radio
14K067	Warning Lamp Feed	Warning Indicators
14086	Rear Window Regulator Control	Tailgate Power Window
14298	Dash Panel to Engine	Air Conditioner/Heater
		Engine Controls
		Start/Ignition
14303	Engine Ground	Grounds
14305	Alternator Rectifier System	Air Conditioner/Heater
		Engine Controls
		Instrument Panel
		Start/Ignition
14334	Interior Lamp Feed	Courtesy Lamps

Base Harness Number	Harness Name	Major Systems
13A409	Rear Lamps Connector	Backup Lamps License Lamp Park/Stop/Turn Lamps
13A576	Trailer Lamp Feed	Trailer Wiring
13A726	Ash Receptacle Lamp	Cigar Lighter Instrument Illumination
13N850	Diesel Starter Relay Ground	Ground
13412	Rear License Lamp	License Lamp
14A107	Rear Axle Control Jumper	Anti-lock Brakes
14A200	Window Regulator Relay Switch	Power Doors Power Windows
14A303	Relay Feed Wiring Assembly	Trailer Wiring
14A346	Trailer Battery Feed	Trailer Wiring
14A348	Trailer Brake Control Switch	Trailer Wiring
14A504	Right Seatbelt Retractor	Radio Seatbelt Retractor
6B018	Engine Block Heater	Engine Block Heater
7A786	Transfer Case Four Wheel Drive Control	All Wheel Drive
9A124	Fuel Tank Selector Switch	Fuel Tank Selector Instrument Panel
9A840	Speed Control	Speed Control
9C887	Vehicle Speed Control Extension	Speed Control Vehicle Speed Control Sensor
9D353	Fuel Pump Motor Jumper	Engine Controls
9D930	Fuel Charge	Engine Controls
11A060	Starter Relay Ground	Grounds
12A581	Engine	Engine Controls Instrument Panel Start Ignition Windshield Wiper/Washer
12A690	Engine Control Sensor Extension	HEGO Sensor Lead
15A411	Right Marker Lamp	Trailer Wirirng
15A416	Trailer Tow Kit	Trailer Wiring
15A404	Marker Lamp To Switch	Exterior Lamps
15A702	Engine Compartment Lamp Feed	Exterior Lamps
15460	Marker Lamp Wiring Assembly	Exterior Lamps

152-3 LOCATION INDEX

Base Harness Number	Harness Name	Major Systems
15525	Backup Lamp	Backup Lamps
18A586	Heater Switch to Blower Motor	Air Conditioner/Heater
19A123	Rear Speaker Extension	Radio

Component	Connector	Base Part No.	Location	Page Zone	Connector Page
4x4 Hi/Low Indicator Switch	C161		Below vehicle, rear of transfer case	151- 11- B6	
A/C Clutch Cycling Pressure Switch (4.9L)	C162	19E561	RH rear of engine compartment, near safety wall	151- 1- B1	
A/C Clutch Cycling Pressure Switch (5.0L) (5.8L)	C162	19E561	RH rear of engine compartment, near safety wall	151- 4- B2	
A/C Clutch Cycling Pressure Switch (7.3L)	C162	19E561	RH rear of engine compartment, near safety wall	151- 6- A1	
A/C Clutch Cycling Pressure Switch (7.5L)	C162	19E561	RH rear of engine compartment, near safety wall	151- 7- B1	
A/C Clutch Field Coil (4.9L)	C163	19701	LH front of engine	151- 2- F6	
A/C Clutch Field Coil (5.0L) (5.8L)	C163	19701	LH front of engine	151- 3-D10	
A/C Clutch Field Coil (7.3L)	C163	19701	LH front of engine	151- 5- D9	
A/C Clutch Field Coil (7.5L)	C163	19701	Front LH side of engine	151- 8- F7	
A/C Clutch Resistor Diode		14A099	LH side of engine compartment, taped to harness, near C113	*	
A/C-Heater Control Assembly	C296	18549	Center of I/P	151- 10- B4	
Air Charge Temperature (ACT) Sensor (4.9L)	C164	12A697	Front RH side of engine, near intake runner #1	151- 1- E1	
Air Charge Temperature (ACT) Sensor (5.0L) (5.8L)	C164	12A697	Top center front of engine, near intake runner #6	151- 4- F5	
Air Charge Temperature (ACT) Sensor (7.5L)	C164	12A697	Center of engine, behind distributor	151- 7- F5	
Alternator	C165	10300	Top RH front of engine	151- 9- D2	
Anti-lock Test Connector	C159	14A459	Behind LH side of I/P, near C202	151- 10- F9	
Ashtray Illumination	C293		Center of I/P	*	
Backup Lamps	C433, C434		Rear of vehicle, on respective sides	151-12- F7	
Backup Lamp Switch	C166	15520	Below center of vehicle, LH rear of transmission	151- 11- E4	

* No Figure Available

152-5 LOCATION INDEX

Component	Connector	Base Part No.	Location	Page Zone	Connector Page
Backup/Neutral Safety Switch	C167	7A247	Below vehicle, LH side of transmission	151- 11- C1	150-1
Blower Motor (4.9L)	C168	18456	RH side of safety wall	151- 1- C1	
Blower Motor (5.0L) (5.8L)	C168	18456	RH side of safety wall	151- 4- B2	
Blower Motor (7.3L)	C168	18456	RH side of safety wall	151- 5- A1	
Blower Motor (7.5L)	C168	18456	RH side of safety wall	151- 7- C1	
Blower Motor Resistor (4.9L)	C169	19A706	RH side of safety wall, on plenum	151- 2- A1	
Blower Motor Resistor (5.0L) (5.8L)	C169	19A706	RH side of safety wall, on plenum	151- 3- B1	
Blower Motor Resistor (7.3L)	C169	19A706	RH side of safety wall, on plenum	151- 5- A2	
Blower Motor Resistor (7.5L)	C169	19A706	RH side of safety wall, on plenum	151- 8- B1	
Blower Switch	C260	19A642	Center of I/P	151- 10- B4	150-1
Brake Fluid Level Switch (4.9L)	C170	2L414	LH rear of engine compartment, on brake fluid reservoir	151- 1-A10	
Brake Fluid Level Switch (7.3L)	C170	2L414	LH rear of engine compartment, on brake fluid reservoir	151- 6- B9	
Brake Fluid Level Switch (7.5L)	C170	2L414	LH rear of engine compartment, on brake fluid reservoir	151- 8-B10	
Brake Warning Resistor/Diode Assembly		14A601	LH rear of engine compartment, near C202	151- 5- A9	
Cab Marker Lamps	C900, C901, C902, C903, C904		Top of cab	★	
Canister Purge Solenoid (4.9L)	C171	9C915	RH side of engine compartment	★	
Canister Purge Solenoid (5.0L) (5.8L)	C171	9C015	Front RH side of engine	151- 4- C2	
Canister Purge Solenoid (7.5L)	C171	9C915	RH side of engine, above exhaust manifold	151- 8- C1	
Cargo Lamp (Bronco)	C307		Above LH rear wheel well	151- 12- F5	
Cargo Lamp (F-Series)	C307		On rear of cab	151- 13- A7	
Cargo Lamp Diode (Bronco)		14A604	LH side of cargo area, behind trim panel, near cargo lamp	151- 12- E5	
Cargo Lamp Diode (F-Series)		14A604	Rear of cab, above LH side of rear window	151- 13- A5	
Charge Indicator Lamp Relay	C172	10B999	On RH fender apron, behind starter relay	151- 9- C9	
Cigar Lighter	C294		Center of I/P	★	
Clutch Interlock Switch	C261	11A152	Behind LH side of I/P, top of clutch pedal support	151- 10- F7	150-1

★ No Figure Available

Component	Connector	Base Part No.	Location	Page Zone	Connector Page
Clutch Interlock Switch Jumper	C261	14B155	Behind LH side of I/P, near steering column	151- 10- F7	
Cold Idle Solenoid	C174		Top center front of engine	151- 6- F5	
Cold Timing Advance Solenoid	C175		Top LH side of engine	151- 6- F6	
Coolant Temperature Diode		14A604	Behind LH side of I/P, near diesel warning lamp display	151- 10- A5	
Coolant Temperature Sender (4.9L)	C176	12A648	RH rear of engine, behind rear intake runner	151- 2- B1	
Coolant Temperature Sender (5.0L) (5.8L)	C176	12A648	Front LH side of engine	151- 3- D9	
Coolant Temperature Sender (7.3L)	C176	12A648	Front LH side of engine	151- 6- F8	
Coolant Temperature Sender (7.5L)	C176	12A648	Front LH side of engine, LH side of distributor	151- 8- F6	
Courtesy Lamp Switches	C262, C263	13713	On front of respective door jambs	151-10-E 10	
Daytime Running Lamps (DRL) Jumper (7.3L)	C177		Front LH side of lower radiator support, near horns	151- 5- F9	
Daytime Running Lamps (DRL) Jumper (7.5L)	C177		Front LH side of lower radiator support, near horns	151- 7- F9	
Daytime Running Lamps (DRL) Module (4.9L)	C177	15A272	Front LH side of lower radiator support, near horns	151- 2- F7	150-2
Daytime Running Lamps (DRL) Module (5.0L) (5.8L)	C177	15A272	Front LH side of lower radiator support, near horns	151- 4- F7	150-2
Daytime Running Lamps (DRL) Module (7.3L)	C177	15A272	Front LH side of lower radiator support, near horns	151- 5- F9	150-2
Daytime Running Lamps (DRL) Module (7.5L)	C177	15A272	Front LH side of lower radiator support, near horns	151- 7- E9	150-2
Diesel Warning Lamp Display	C264		LH side of I/P	151- 10- A6	
Dimmer Switch	C265	13A024	Front LH side of floor pan, near LH cowl panel	151- 10-F10	
Distributor (4.9L)		12100	LH side of engine	151- 1-D10	
Distributor (5.0L) (5.8L)		12100	Center front of engine	151- 3-F10	
Distributor (7.5L)	C178	12100	Center front of engine	151- 8-D10	150-2

★ No Figure Available

Component	Connector	Base Part No.	Location	Page Zone	Connector Page
Dome Lamp	C905, C906		Center of headliner	151- 13- A6	
Door Lock Motors	C502, C602		In rear of respective doors	151- 12- D1	
E4OD Transmission	C1048		Below center of vehicle	151- 11- A3	150-8
EEC Power Relay (4.9L)	C179	12A646	LH side of engine compartment, on relay bracket	151- 1-C10	150-2
EEC Power Relay (5.0L)(5.8L)	C179	12A646	LH side of engine compartment, on relay bracket	151- 3- C9	150-2
EEC Power Relay (7.5L)	C179	12A646	LH side of engine compartment, on relay bracket	151- 8- C9	150-2
EGR Control Solenoid (4.9L)	C180	9D474	LH rear of engine, near valve cover	151- 1- A8	
EGR Control Solenoid (5.0L)(5.8L)	C180	9D474	LH side of engine, on ignition coil support bracket	151- 4- A5	
EGR Vacuum Regulator (EVR) Solenoid	C181	9D475	LH rear of engine, near throttle body	151- 7- A6	
EGR Valve Position (EVP) Sensor (4.9L)	C182	9G428	Top LH rear of engine	151- 1- A4	
EGR Valve Position (EVP) Sensor (5.0L)(5.8L)	C182	9G428	Front RH side of engine	151- 3- C1	
EGR Valve Position (EVP) Sensor (7.5L)	C182	9G428	LH rear of engine	151- 7- A6	
Electronic Engine Control (EEC) Module (4.9L)	C185	12A650	LH side of safety wall, below brake fluid reservoir	151- 2- A9	150-3
Electronic Engine Control (EEC) Module (5.0L)(5.8L)	C185	12A650	LH side of safety wall, below brake fluid reservoir	151- 3- A9	150-3
Electronic Engine Control (EEC) Module (7.5L)	C185	12A650	LH side of safety wall, below brake fluid reservoir	151- 7- A8	150-5
Electronic Shift Control Module	C221, C222, C223	7E453	Behind RH cowl panel	151- 12- A6	150-7
Electronic Shift Control Switch	C267	7Z155	LH side of I/P	151- 10- A5	150-8
Engine Coolant Temperature (ECT) Sensor (4.9L)	C183	12A648	Center front of engine, on thermostat housing	151- 1- F4	

★ No Figure Available

Component	Connector	Base Part No.	Location	Page Zone	Connector Page
Engine Coolant Temperature (ECT) Sensor (5.0L)(5.8L)	C183	12A648	Center front of engine, on thermostat housing	151- 4- D2	
Engine Coolant Temperature (ECT) Sensor (7.5L)	C183	12A648	Center front of engine, near distributor	151- 7- F4	
Engine Lamp	C1035		In engine compartment	*	
Engine RPM Sensor	C184	17360	Top LH front of engine	151- 5-F74	
Engine Temperature Switch	C186		Top RH front of engine	151- 5- F4	
Front Door Speakers	C505, C605		In respective doors	151-12- B10	
Front Park/Turn Lamp	C1031, C1032		Front of vehicle, on respective sides	151- 8- F9	
Front Tank Fuel Gauge Sender	C421	9H307	Top of front fuel tank	151- 11- F5	
Front Tank Fuel Gauge Sender And Pump	C443		In front fuel tank	*	
Fuel Gauge Sender And Pump	C422	9H307	Top of fuel tank	151- 11- E5	
Fuel Injection Pump Lever (FIPL) Sensor	C187	9B989	LH side of engine	151- 6- F7	
Fuel Injectors (4.9L)	C190, C191, C192, C193, C194, C195	9F593	RH side of engine, in lower intake manifold	151- 1- D2	
Fuel Injectors (5.0L)(5.8L)	C190, C191, C192, C193, C194, C195, C196, C197	9F593	Top of engine, in lower intake manifold	151- 3- A5	
Fuel Injectors (7.5L)	C190, C191, C192, C193, C194, C195, C196, C197	9F593	Top of engine, in lower intake manifold	151- 8- A5	
Fuel Line Heater	C188		Front RH side of engine, near fuel filter	*	
Fuel Pump Relay (4.9L)	C189	9345	LH side of engine compartment, on relay bracket	151- 2- D9	150-8
Fuel Pump Relay (5.0L)(5.8L)	C189	9345	LH side of engine compartment, on relay bracket	151- 4- D9	150-8
Fuel Pump Relay (7.5L)	C189	9345	LH side of engine compartment, on relay bracket	151- 7- D9	150-8
Fuel Shut Off Solenoid	C1000	9D278	Top of engine	151- 6- F6	

* No Figure Available

Component	Connector	Base Part No.	Location	Page Zone	Connector Page
Fuel Tank Selector Switch	C268	9A050	LH side of I/P	151- 10- A9	150-9
Fuel Tank Selector Valve	C423	9F271	On LH frame rail, below driver's door	151- 11- C6	150-9
Fuel Water Switch	C1001	9J308	Front RH side of engine, near fuel filter	151- 6- B2	
Fuse Link A (4.9L)		14526	Front of RH fender apron, at starter relay	151- 2- D1	
Fuse Link A (5.0L) (5.8L)		14526	Front of RH fender apron, at starter relay	151- 4- D2	
Fuse Link A (7.5L)		14526	Front of RH fender apron, in engine harness	151- 7- D1	
Fuse Link B		14526	Front of RH fender apron, in engine harness	151- 6- E1	
Fuse Link C		14526	Front of RH fender apron, in engine harness	151- 6- E1	
Fuse Link F (4.9L)		14526	Front of RH fender apron, at starter relay	151- 2- D1	
Fuse Link F (5.0L) (5.8L)		14526	Front of RH fender apron, at starter relay	151- 4- D2	
Fuse Link F (7.3L)		14526	Front of RH fender apron, in engine harness	151- 6- E1	
Fuse Link F (7.5L)		14526	Front of RH fender apron, in engine harness	151- 7- D1	
Fuse Link G		14526	Front of RH fender apron, in engine harness	151- 6- E1	
Fuse Link J (4.9L)		14526	Front of RH fender apron, at starter relay	151- 2- D1	
Fuse Link J (5.0L) (5.8L)		14526	Front of RH fender apron, at starter relay	151- 4- D2	
Fuse Link J (7.3L)		14526	Front of RH fender apron, at starter relay	151- 6- D1	
Fuse Link J (7.5L)		14526	Front of RH fender apron, in engine harness	151- 7- D1	
Fuse Link L (4.9L)		14526	Front of RH fender apron, at starter relay	151- 2- D1	
Fuse Link L (5.0L) (5.8L)		14526	Front of RH fender apron, at starter relay	151- 4- D2	
Fuse Link L (7.3L)		14526	Front of RH fender apron, in engine harness	151- 6- E1	
Fuse Link L (7.5L)		14526	Front of RH fender apron, in engine harness	151- 7- D1	
Fuse Link M (4.9L)		14526	Front of RH fender apron, at starter relay	151- 2- C1	
Fuse Link M (5.0L) (5.8L)		14526	Front of RH fender apron, at starter relay	151- 4- C2	
Fuse Link M (7.3L)		14526	Front of RH fender apron, in engine harness	151- 6- E1	
Fuse Link N (4.9L)		14526	Front of RH fender apron, at starter relay	151- 2- D1	
Fuse Link N (5.0L) (5.8L)		14526	Front of RH fender apron, at starter relay	151- 4- D2	
Fuse Link N (7.3L)		14526	Front of RH fender apron, in engine harness	151- 6- E1	
Fuse Link N (7.5L)		14526	Front of RH fender apron, in engine harness	151- 7- D1	
Fuse Link P (4.9L)		14526	Front of RH fender apron, at starter relay	151- 2- D1	
Fuse Link P (5.0L) (5.8L)		14526	Front of RH fender apron, in engine harness	151- 4- D2	
Fuse Link P (7.3L)		14526	Front of RH fender apron, in engine harness	151- 6- E1	
Fuse Link P (7.5L)		14526	Front of RH fender apron, in engine harness	151- 7- D1	
Fuse Link W (4.9L)		14526	Front of RH fender apron, at starter relay	151- 2- D1	
Fuse Link W (5.0L) (5.8L)		14526	Front of RH fender apron, at starter relay	151- 4- D2	

★ No Figure Available

Component	Connector	Base Part No.	Location	Page Zone	Connector Page
Fuse Link W (7.5L)		14526	Front of RH fender apron, in engine harness	151- 7- D1	
Fuse Link X		14526	RH side of engine compartment, near blower motor	151- 5- C2	
Fuse Link Z		14526	RH side of engine compartment, near blower motor	151- 5- C2	
Fuse Panel		14A068	Behind lower LH side of I/P	151-10-D10	
Glove Compartment Lamp	C292		In glove compartment	151-10- A2	
Glow Plug Controller	C1002		Top of engine, near LH rear corner	151- 6- A5	
Glow Plugs	C1040, C1041, C1042, C1043, C1044, C1045, C1046, C1047		Top of each cylinder head	★	
Hazard Flasher	C295	13350	Behind RH side of I/P, near horn relay	151- 10- D1	
Headlamps	C1033, C1034		Front of vehicle, on respective sides	151-7- F8	
Heated Exhaust Gas Oxygen (HEGO) Sensor (Over 8500 GVW)	C1003	9F472	Below RH side of vehicle, in exhaust manifold	151- 11- A5	
Heated Exhaust Gas Oxygen (HEGO) Sensor (Under 8500 GVW)	C1003	9F472	RH rear of engine compartment, in exhaust manifold	★	
Heater Control Assembly	C297		Center of I/P	★	
Heater Controls Illumination	C298		Center of I/P	★	
Horn Relay	C270	13853	Behind RH side of I/P, near RH side of glove box	151- 10- C1	150-9
Horn Relay Jumper	C270		Behind RH side of I/P, near hazard flasher	★	
Horns (4.9L)	C1005, C1006	13802	Front LH side of lower radiator support	151- 1- F8	
Horns (5.0L)(5.8L)	C1005, C1006	13802	Front LH side of lower radiator support	151- 3- F7	
Horns (7.3L)	C1005, C1006	13802	Front LH side of lower radiator support	151- 6- E9	
Horns (7.5L)	C1005, C1006	13802	Front LH side of lower radiator support	151- 8- F8	
Idle Air Bypass Valve (4.9L)	C1007	12B526	LH side of engine, top of throttle body	151- 2- F5	
Idle Air Bypass Valve (5.0L)(5.8L)	C1007	12B526	Center of engine, top of throttle body	151- 3- F6	
Idle Air Bypass Valve (7.5L)	C1007	12B526	Top center of engine, below throttle body	151- 8- F5	
Ignition Coil (4.9L)	C1008	11082	Lower LH side of engine, forward of distributor	151- 1- F6	
Ignition Coil (5.0L)(5.8L)	C1008	11082	LH rear of engine, near intake manifold	151- 3- A7	
Ignition Coil (7.5L)	C1008	11082	LH side of engine, above valve cover	151- 8- A7	

★ No Figure Available

Component	Connector	Base Part No.	Location	Page Zone	Connector Page
Ignition Key Warning Switch	C219	11A127	Top of steering column, part of ignition switch	*	
Ignition Suppression Resistor		12250	LH side of engine compartment, taped to harness	*	
Ignition Switch	C269	11572	Top RH side of steering column	151- 10- F6	150-10
Inertia Switch	C271	9341	Behind LH side of I/P, near LH side of steering column	151- 10- F8	
Instrument Cluster (Diesel Engine)	C250, C251	9271	Top LH side of I/P	151- 10- A8	150-12
Instrument Cluster (Gasoline Engines)	C250, C251	9271	Top LH side of I/P	151- 10- A8	150-11
Integral Alternator Regulator (IAR) (4.9L)	C153, C154		Front RH side of engine	151- 2- D1	150-10
Integral Alternator Regulator (IAR) (5.0L) (5.8L)	C153, C154		Front RH side of engine	151- 4- F5	150-10
Integral Alternator Regulator (IAR) (7.5L)	C153, C154		Front RH side of engine	151- 8- D1	150-10
Interval Governor	C150	17C476	Behind LH side of I/P, near windshield wiper/washer switch	151-10-B 10	
Knock Sensor (4.9L)	C1009	12A699	LH side of engine, near ignition coil	151- 1- F7	
Knock Sensor (5.0L) (5.8L)	C1009	12A699	Center rear of engine, behind intake manifold	151- 4- A4	
Leece/Neville Alternator	C1050, C1051	10306	Front RH side of engine	151- 9- D2	
License Lamps	C435, C436		Rear of vehicle, on respective sides	151- 11- E9	
Low Vacuum Warning Switch	C1010	12A182	RH side of engine compartment, near voltage regulator	151- 9- F4	
Main Light Switch	C273	11654	LH side of I/P, left of steering column	151-10-C10	150-13
Manifold Absolute Pressure (MAP) Sensor (4.9L)	C1011	12A680	RH side of safety wall	151- 1- A1	
Manifold Absolute Pressure (MAP) Sensor (5.0L) (5.8L)	C1011	12A680	RH side of safety wall	151- 4- A3	
Manifold Absolute Pressure (MAP) Sensor (7.3L)	C1011	12A680	RH side of safety wall	151- 5- A3	
Manifold Absolute Pressure (MAP) Sensor (7.5L)	C1011	12A680	RH side of safety wall	151- 7- B1	
Manual Lever Position Sensor	C1012	7A256	Below center of vehicle, LH side of transmission	151- 11- C1	150-13

* No Figure Available

Component	Connector	Base Part No.	Location	Page Zone	Connector Page
Map/Dome Lamp	C905, C906		Center of headliner	151-13- A6	
Master Tailgate Window Switch	C274	14529	LH side of I/P, near rear window defrost switch	151- 10- A8	150-13
Master Window Control Switch/ Left Door Lock Control Switch	C503	14529	On LH door panel	151- 12- E1	150-23
Multi-function Switch	C219	13K359	Top LH side of steering column	151- 10- F8	150-14
Oil Pressure Switch (4.9L)	C1013	9278	Lower LH rear of engine, near oil filter	151- 2- D9	
Oil Pressure Switch (5.0L)(5.8L)	C1013	9278	Lower LH side of engine, near oil filter	151- 4- D9	
Oil Pressure Switch (7.3L)	C1013	9278	Top LH rear of engine	151- 5- A5	
Oil Pressure Switch (7.5L)	C1013	9278	Top rear of engine	151- 7- A4	
Overdrive Switch	C275		LH center of I/P	151- 10- B6	150-15
Overheat Warning Switch	C1014		LH front of engine	151- 6- D9	
Park Brake Switch	C276	15A851	Behind LH side of I/P, top of park brake pedal	151-10-D10	
Plugged Fuel Filter Switch	C1015		RH side of engine, in fuel filter housing	151- 5- B2	
Power Steering Pressure Switch	C1016	3783	Lower LH front of engine compartment	*	
RABS Rear Axle Sensor	C425	19E761	Below rear of vehicle, top of differential	151- 11- B8	
RABS Test Connector (4.9L)	C143	14A624	LH side of engine compartment, on relay bracket	151- 2- C9	
RABS Test Connector (5.0L)(5.8L)	C143	14A624	LH side of engine compartment, on relay bracket	151- 4-C10	
RABS Test Connector (7.3L)	C143	14A624	LH side of engine compartment, on relay bracket	151- 5- C9	
RABS Test Connector (7.5L)	C143	14A624	LH side of engine compartment, on relay bracket	151- 7- D9	
RABS Valve Assembly	C158		On LH frame rail, near transmission	151- 11- C1	
Radio	C257, C258	19159	Center of I/P	151- 10- F4	150-15
Radio Capacitor (4.9L)	C1017	18832	LH side of engine, near ignition coil	151- 1- F5	
Radio Capacitor (5.0L)(5.8L)	C1017	18832	LH side of engine, near ignition coil	151- 3- A8	
Radio Capacitor (7.3L)	C1017		RH side of engine compartment, near voltage regulator	*	
Radio Capacitor (7.5L)	C1017	18832	LH side of engine, near ignition coil	151- 8- A7	
Rear Anti-Lock Brake (RABS) Module	C277		Behind center of I/P, near radio	151- 10- F6	150-16
Rear Body Marker Lamp	C410		Rear of vehicle	*	
Rear Park Lamps	C440, C441		Rear of vehicle, on respective sides	151-11-D10	

* No Figure Available

Component	Connector	Base Part No.	Location	Page Zone	Connector Page
Rear Park/Stop/Turn Lamps	C431, C432		Rear of vehicle, on respective sides	151-12- E8	
Rear Speakers	C308, C309		Behind trim panel, respective sides of cargo area	151-12- A2	
Rear Tank Fuel Gauge Sender	C427	9H307	Top of rear fuel tank	151- 11- C9	
Rear Tank Fuel Gauge Sender And Pump	C443		In rear fuel tank	*	
Rear Window Defrost Grid	C310, C311		On rear window	*	
Rear Window Defrost Switch	C278	19A328	LH side of I/P, near master tailgate window switch	151-10-C10	150-16
Right Window Control Switch/Right Door Lock Control Switch	C603	14529	On RH door panel	151- 12- A9	150-23
Seat Belt Retractor Switch	C302		LH front of floor pan, below RH side of LH front seat	151- 12- F5	
Side Body Marker Lamps	C411, C412, C413, C420		On respective quarter panels	*	
Speed Control Amplifier	C216, C217	9D843	Behind center of I/P, below radio	151- 10- F5	150-17
Speed Control Servo (4.9L)	C1018	9C735	LH rear of engine compartment, near fender apron	151- 2- B9	150-17
Speed Control Servo (5.0L) (5.8L)	C1018	9C735	LH rear of engine compartment, near fender apron	151- 4-B10	150-17
Speed Control Servo (7.3L)	C1018	9C735	LH rear of engine compartment, near fender apron	151- 5- A9	150-17
Speed Control Servo (7.5L)	C1018	9C735	LH rear of engine compartment, near fender apron	151- 7- C9	150-17
SPOUT Check Connector (4.9L)	C1019	14A464	LH side of engine, near TFI ignition module	151- 2- F7	
SPOUT Check Connector (5.0L) (5.8L)	C1019	14A464	Front of engine, near TFI ignition module	151- 4- F6	
SPOUT Check Connector (7.5L)	C1019	14A464	Rear of LH fender apron, near TFI ignition module	151- 7- B9	
Starter Motor (4.9L)		11002	Lower RH side of engine	*	
Starter Motor (5.0L) (5.8L)		11002	Lower RH side of engine	151- 4- A4	
Starter Motor And Solenoid		11001	Lower RH side of engine	*	
Starter Relay (4.9L)		12B598	Front of RH fender apron	151- 2- C1	
Starter Relay (5.0L) (5.8L)		12B598	Front of RH fender apron	151- 4- D2	
Starter Relay (7.3L)		12B598	Front of RH fender apron	151- 6- D1	

* No Figure Available

Component	Connector	Base Part No.	Location	Page Zone	Connector Page
Starter Relay (7.5L)		12B598	Front of RH fender apron	151- 7- C1	
Stop Lamp Switch	C279	13480	Behind LH side of I/P, top of brake pedal	151- 10- B8	
Tailgate Latch Switch	C428		In LH side of tailgate, top of latch assembly	151- 12- F8	
Tailgate Power Window Motor	C429		In center of tailgate	151-12-E 10	
Tailgate Window Switch	C430	14A046	In LH side of tailgate	151- 12- F8	
TECA Power Relay	C1020	14A094	LH side of engine compartment, on relay bracket	151- 5- C9	150-18
TFI Ignition Module (4.9L)	C1021	9F479	LH side of engine, under distributor	151- 1- F7	150-18
TFI Ignition Module (5.0L)(5.8L)	C1021	9F479	Front of engine, under distributor	151- 3- F7	150-18
TFI Ignition Module (7.5L)	C1021	12B582	Rear of LH fender apron	151- 7- B9	150-18
Thermactor Air Bypass (TAB) Solenoid (4.9L)	C1022	9H465	LH side of engine, near valve cover	151- 2- A5	
Thermactor Air Bypass (TAB) Solenoid (5.0L)(5.8L)	C1022	9H465	LH side of engine, on ignition coil support bracket	151- 3- A6	
Thermactor Air Bypass (TAB) Solenoid (7.5L)	C1022	9H465	LH side of engine, near ignition coil	151- 7- A6	
Thermactor Air Diverter (TAD) Solenoid (4.9L)	C1023	9H465	LH rear of engine, near valve cover	151- 1- A6	
Thermactor Air Diverter (TAD) Solenoid (5.0L)(5.8L)	C1023	9H465	LH side of engine, on ignition coil support bracket	151- 4- A6	
Throttle Position Sensor (TPS) (4.9L)	C1024	9B989	LH rear of engine, on throttle body	151- 2- A4	
Throttle Position Sensor (TPS) (5.0L)(5.8L)	C1024	9B989	Top center of engine, on throttle body	151- 3- F5	
Throttle Position Sensor (TPS) (7.5L)	C1024	9B989	Top LH side of engine, on side of throttle body	151- 7- A5	
Trailer Marker Lamps Relay	C1025	13A025	LH side of engine compartment, on relay bracket	★	150-18
Transfer Case Assembly	C220	1356	Below center of vehicle, on rear of transmission	★	150-19
Transmission Electronic Control Assembly (TECA)	C1027		LH side of safety wall, below brake fluid reservoir	151- 6- A9	150-20

★ No Figure Available

Component	Base Part No.	Location		Page Zone	Connector Page
Turn Flasher		13350	Behind LH side of I/P, on fuse panel	151-10-C10	
Vehicle Speed Sensor (Automatic)	C1028	9E731	Below center of vehicle, LH rear of transmission	151-11- A6	
Vehicle Speed Sensor (Manual)	C1028	9E731	Below center of vehicle, on rear of transmission	151-11- D3	
VIP Test Connector C198 (4.9L)		14489	LH side of engine compartment, on relay bracket	151- 1-D10	150-22
VIP Test Connector C198 (5.0L) (5.8L)		14489	LH side of engine compartment, on relay bracket	151- 3- C9	150-22
VIP Test Connector C198 (7.3L)		14489	LH side of engine compartment, on relay bracket	151- 5- D9	150-22
VIP Test Connector C198 (7.5L)		14489	LH side of engine compartment, on relay bracket	151- 8- D9	150-22
VIP Test Connector C199 (4.9L)		14489	LH side of engine compartment, on relay bracket	151 -1-D10	150-22
VIP Test Connector C199 (5.0L) (5.8L)		14489	LH side of engine compartment, on relay bracket	151- 3- C9	150-22
VIP Test Connector C199 (7.3L)		14489	LH side of engine compartment, on relay bracket	151- 5- D9	150-22
VIP Test Connector C199 (7.5L)		14489	LH side of engine compartment, on relay bracket	151- 8- D9	150-22
Voltage Regulator	C1029	10316	RH side of engine compartment, near starter relay	151- 9- F5	
Warning Chime Module	C280	10D840	Behind LH side of I/P, near RH side of steering column	151-10- B6	150-22
Washer Pump Motor (4.9L)	C1030	17664	LH front of engine compartment, in windshield washer fluid reservoir	151- 2-E10	
Washer Pump Motor (5.0L) (5.8L)	C1030	17664	LH front of engine compartment, in windshield washer fluid reservoir	151- 3-E10	
Washer Pump Motor (7.3L)	C1030	17664	LH side of engine compartment, in windshield washer fluid reservoir	151- 6- D9	
Washer Pump Motor (7.5L)	C1030	17664	LH front of engine compartment, in windshield washer fluid reservoir	151- 8-E10	

★ No Figure Available

Component	Base Part No.	Location		Page Zone	Connector Page
Window Motors	C500, C600		In front of respective front doors	151-12- E2	
Windshield Wiper Motor (4.9L)	C151, C152	17504	LH side of safety wall	151- 2- A6	150–24
Windshield Wiper Motor (5.0L)(5.8L)	C151, C152	17504	LH side of safety wall	151- 3- A7	150–24
Windshield Wiper Motor (7.3L)	C151, C152	17504	LH side of safety wall	151- 5- A6	150–24
Windshield Wiper Motor (7.5L)	C151, C152	17504	LH side of safety wall	151- 8- A6	150–24
Windshield Wiper/Washer Controls Lamp	C290		LH side of I/P	151-10-B10	
Windshield Wiper/Washer Switch	C281	17A553	LH side of I/P, near main light switch	151-10-B10	150–24

★ No Figure Available

Connector	Location	Page Zone	Connector Page	Color	Terminal
C100 (4.9L)	LH side of safety wall, above brake fluid reservoir	151- 2- A8		GY	4
C100 (5.0L)(5.8L)	LH side of safety wall, above brake fluid reservoir	151- 4- A8		GY	4
C100 (7.3L)	LH side of safety wall, above brake fluid reservoir	151- 6- A7		GY	4
C100 (7.5L)	LH side of safety wall, above brake fluid reservoir	151- 8- A8		GY	4
C101 (4.9L)	LH side of engine compartment, side of wheel well	151- 1- C9		GY	8
C101 (5.0L)(5.8L)	LH side of engine compartment, side of wheel well	151- 3- B9		GY	8
C101 (7.5L)	LH side of engine compartment, side of wheel well	151- 8- B9		GY	8
C102 (4.9L)	LH side of engine compartment, rear of wheel well	151- 2- B9		GY	4
C102 (5.0L)(5.8L)	LH side of engine compartment, side of wheel well	151- 4- C9		GY	4
C102 (7.3L)	LH side of engine compartment, rear of wheel well	151- 5- B9		GY	4
C102 (7.5L)	LH side of engine compartment, side of wheel well	151- 7- C9		GY	4
C103 (4.9L)	LH side of engine compartment, top of wheel well	151- 1- B9		BK	8
C103 (5.0L)(5.8L)	LH side of engine compartment, top of wheel well	151- 3- C9		BK	8
C103 (7.3L)	LH side of engine compartment, side of wheel well	151- 5- B9		BK	8
C103 (7.5L)	LH side of engine compartment, top of wheel well	151- 8- C9		BK	8
C104 (4.9L)	RH rear of engine compartment, near blower motor	151- 2- B1		BK	4
C104 (5.0L)(5.8L)	RH rear of engine compartment, near blower motor	151- 3- B1		BK	4
C104 (7.3L)	RH rear of engine compartment, near blower motor	151- 6- B1		BK	4
C104 (7.5L)	RH rear of engine compartment, near blower motor	151- 8- B2		BK	4
C105	RH side of engine compartment, top of wheel well	151- 6- C1		BK	4
C106 (4.9L)	LH side of engine compartment, side of wheel well	151- 2- B9		BK	8
C106 (5.0L)(5.8L)	LH side of engine compartment, side of wheel well	151- 4- C9		BK	8

★ No Figure Available

Connector	Location	Page Zone	Connector Page	Color	Terminal
C106 (7.5L)	LH side of engine compartment, side of wheel well	151- 7- C9		BK	8
C107 (4.9L)	RH side of engine compartment, behind battery	151- 2- D1		BK	1
C107 (5.0L)(5.8L)	RH side of engine compartment, behind battery	151- 3- D1		BK	1
C107 (7.3L) (With 165 Amp Alternator)	RH side of engine compartment, behind battery	151- 9- E9		BK	1
C107 (7.3L) (Without 165 Amp Alternator)	RH side of engine compartment, behind battery	151- 6- B2		BK	1
C108	RH side of engine compartment, near voltage regulator	151- 9- B3		GY	8
C110 (4.9L)	LH side of engine compartment, top of wheel well	151- 1-C10		BK	8
C110 (5.0L)(5.8L)	LH side of engine compartment, top of wheel well	151- 3- C9		BK	8
C110 (7.5L)	LH side of engine compartment, top of wheel well	151- 8- C9		BK	8
C113 (4.9L)	LH side of engine compartment, side of wheel well	151- 1-C10		GY	8
C113 (5.0L)(5.8L)	LH side of engine compartment, side of wheel well	151- 3- C9		GY	8
C113 (7.5L)	LH side of engine compartment, side of wheel well	151- 8- C9		GY	8
C114	RH front of engine compartment	*		BK	4
C115	RH side of engine compartment, near voltage regulator	151- 9- A5		GY	4
C117	Below center of vehicle, near LH rear of transmission	151-11- A3		GY	4
C119	RH side of engine compartment, near voltage regulator	151- 9- B3		GY	8
C121	Front of engine, near distributor	*		BK	8
C122 (4.9L)	LH side of engine compartment, side of wheel well	151- 2- C9		BK	8
C122 (5.0L)(5.8L)	LH side of engine compartment, side of wheel well	151- 4- C9		BK	8
C122 (7.5L)	LH side of engine compartment, side of wheel well	151- 7- C9		BK	8
C125	Center rear of engine, on valve cover	151- 1- A5		BK	8
C127	Below center of vehicle, near LH side of transmission	*		GY	8
C129	LH side of engine compartment, top of wheel well	151-11- A2		GR	8
C129 (7.3L)	LH side of engine compartment, side of wheel well	151- 5- C9		GR	8
C133 (4.9L)	LH side of engine compartment, rear of wheel well	151- 1-B10		BK	8
C133 (5.0L)(5.8L)	LH side of engine compartment, rear of wheel well	151- 3- B9		BK	8
C133 (7.3L)	LH side of engine compartment, rear of wheel well	151- 5- B9		BK	8
C133 (7.5L)	LH side of engine compartment, rear of wheel well	151- 8- B9		BK	8
C134 (4.9L)	LH side of engine compartment, rear of wheel well	151- 1-B10		BR	8
C134 (5.0L)(5.8L)	LH side of engine compartment, rear of wheel well	151- 3- B9		BR	8
C134 (7.3L)	LH side of engine compartment, rear of wheel well	151- 5- B9		BR	8
C134 (7.5L)	LH side of engine compartment, rear of wheel well	151- 8- B9		BR	8
C138	RH side of engine compartment, near voltage regulator	151- 5- C2		BK	12

* No Figure Available

Connector	Location	Page Zone	Connector Page	Color	Terminal
C139 (4.9L)	RH side of engine compartment, near battery	151- 2- C1		BK	1
C139 (5.0L)(5.8L)	RH side of engine compartment, near battery	151- 3- D1		BK	1
C139 (7.5L)	RH side of engine compartment, near battery	151- 7- C1		BK	1
C143 RABS Test Connector (4.9L)	LH side of engine compartment, on relay bracket	151- 2- C9		BK	2
C143 RABS Test Connector (5.0L)(5.8L)	LH side of engine compartment, on relay bracket	151- 4-C10		BK	2
C143 RABS Test Connector (7.3L)	LH side of engine compartment, on relay bracket	151- 5- C9		BK	2
C143 RABS Test Connector (7.5L)	LH side of engine compartment, on relay bracket	151- 7- D9		BK	2
C149	LH rear of engine compartment, near electronic engine control (EEC) module	*		BK	4
C150	Behind top LH side of I/P	*		BK	7
C151 (4.9L)	LH side of safety wall, on windshield wiper motor	151- 2- A7	150-24	GY	3
C151 (5.0L)(5.8L)	LH side of safety wall, on windshield wiper motor	151- 4- A7	150-24	GY	3
C151 (7.3L)	LH side of safety wall, on windshield wiper motor	151- 5- A7	150-24	GY	3
C151 (7.5L)	LH side of safety wall, on windshield wiper motor	151- 7- A7	150-24	GY	3
C152 (4.9L)	LH side of safety wall, on windshield wiper motor	151- 1- A7	150-24	BK	3
C152 (5.0L)(5.8L)	LH side of safety wall, on windshield wiper motor	151- 4- A7	150-24	BK	3
C152 (7.3L)	LH side of safety wall, on windshield wiper motor	151- 5- A7	150-24	BK	3
C152 (7.5L)	LH side of safety wall, on windshield wiper motor	151- 8- A6	150-24	BK	3
C153 (4.9L)	RH front of engine, on integral alternator regulator (IAR)	151- 2- F4	150-10	BK	3
C153 (5.0L)(5.8L)	RH front of engine, on integral alternator regulator (IAR)	151- 4- F4	150-10	BK	3
C153 (7.5L)	RH front of engine, on integral alternator regulator (IAR)	151- 8- F5	150-10	BK	3
C154 (4.9L)	RH front of engine, on integral alternator regulator (IAR)	151- 2- F5	150-10	BK	3
C154 (5.0L)(5.8L)	RH front of engine, on integral alternator regulator (IAR)	151- 4- F4	150-10	BK	3
C154 (7.5L)	RH front of engine, on integral alternator regulator (IAR)	151- 8- F4		BK	3
C158	On LH frame rail, near RABS valve assembly cover	151-11- D4		BK	4
C159 Anti-lock Test Connector	Behind LH side of I/P, near C202	151-10- F9		BK	1
C160 (4.9L)	LH side of engine compartment, rear of wheel well	151- 2- A8		BK	4
C160 (5.0L)(5.8L)	LH side of engine compartment, rear of wheel well	151- 4- A8		BK	4
C160 (7.5L)	LH side of engine compartment, rear of wheel well	151- 7- C9		BK	4
C161	Below vehicle, on 4x4 indicator switch	151-11- B6		BK	2
C162 (4.9L)	RH rear of engine compartment, on A/C clutch cycling pressure switch	151- 1- B1		GY	3
C162 (5.0L)(5.8L)	RH rear of engine compartment, on A/C clutch cycling pressure switch	151- 4- B2		GY	3

* No Figure Available

Connector	Location	Page Zone	Connector Page	Color	Terminal
C162 (7.3L)	RH rear of engine compartment, on A/C clutch cycling pressure switch	151- 6- A1		GY	3
C162 (7.5L)	RH rear of engine compartment, on A/C clutch cycling pressure switch	151- 7- B1		GY	3
C163 (4.9L)	LH front of engine, on A/C clutch field coil	151- 2- F6		BK	2
C163 (5.0L)(5.8L)	LH front of engine, on A/C clutch field coil	151- 3-D10		BK	2
C163 (7.3L)	LH front of engine, on A/C clutch field coil	151- 5- D9		BK	2
C163 (7.5L)	LH front of engine, on A/C clutch field coil	151- 8- F7		BK	2
C164 (4.9L)	Front RH side of engine, on air charge temperature (ACT) sensor	151- 1- E1		BK	2
C164 (5.0L)(5.8L)	Top center front of engine, on air charge temperature (ACT) sensor	151- 4- F5		BK	2
C164 (7.5L)	Center of engine, on air charge temperature (ACT) sensor	151- 7- F5		BK	2
C166	Below center of vehicle, on backup lamp switch	151-11- E4		BK	2
C167	Below vehicle, on backup/neutral safety switch	151-11- C1	150- 1	BK	5
C168 (4.9L)	RH side of safety wall, on blower motor	151- 1- C1		BK	2
C168 (5.0L)(5.8L)	RH side of safety wall, on blower motor	151- 4- B2		BK	2
C168 (7.3L)	RH side of safety wall, on blower motor	151- 5- A1		BK	2
C169 (4.9L)	RH side of safety wall, on blower motor resistor	151- 2- A1		W	4
C169 (5.0L)(5.8L)	RH side of safety wall, on blower motor resistor	151- 3- B1		W	4
C169 (7.5L)	RH side of safety wall, on blower motor resistor	151- 8- B1		W	4
C169 (7.3L)	RH side of safety wall, on blower motor resistor	151- 5- A2		W	4
C170 (4.9L)	LH rear of engine compartment, on brake fluid level switch	151- 1-A10		GY	3
C170 (5.0L)(5.8L)	LH rear of engine compartment, on brake fluid level switch	151- 3- B9		GY	3
C170 (7.3L)	LH rear of engine compartment, on brake fluid level switch	151- 6- B9		GY	3
C170 (7.5L)	LH rear of engine compartment, on brake fluid level switch	151- 8-B10		GY	3
C171 (4.9L)	RH side of engine compartment, on canister purge solnoid	*		BK	2
C171 (5.0L)(5.8L)	Front RH side of engine, on canister purge solenoid	151- 4- C2		BK	2
C171 (7.5L)	RH side of engine, on canister purge solenoid	151- 8- C1		BK	2
C172	On RH fender apron, on charge indicator lamp relay	151- 9- C9		BL	4
C173	LH rear of engine compartment, near hood hinge	*		BK	4
C174	Top center front of engine, on cold idle solenoid	151- 6- F5			
C175	Top LH side of I/P, on cold timing advance solenoid	151- 6- F6			
C176 (4.9L)	RH rear of engine, on coolant temperature sender	151- 2- B1		BK	1
C176 (5.0L)(5.8L)	Front LH side of engine, on coolant temperature sender	151- 3- D9		BK	1

* No Figure Available

Connector	Location	Page Zone	Connector Page	Color	Terminal
C176 (7.3L)	Front LH side of engine, on coolant temperature sender	151- 6- F8		BK	1
C176 (7.5L)	Front LH side of engine, on coolant temperature sender	151- 8- F6		BK	1
C177 (4.9L)	Front LH side of lower radiator support, on daytime running lamps (DRL) module	151- 2- F7	150- 2	BK	8
C177 (5.0L)(5.8L)	Front LH side of lower radiator support, on daytime running lamps (DRL) module	151- 4- F7	150- 2	BK	8
C177 (7.3L)	Front LH side of lower radiator support, on daytime running lamps (DRL) module	151- 5- F9	150- 2	BK	8
C177 (7.5L)	Front LH side of lower radiator support, on daytime running lamps (DRL) module	151- 7- E9	150- 2	BK	8
C178	Center front of engine, on distributor	151- 8-D10		GY	8
C179 (4.9L)	LH side of engine compartment, on EEC power relay	151- 1-C10	150- 2	BR	5
C179 (5.0L)(5.8L)	LH side of engine compartment, on EEC power relay	151- 3- C9	150- 2	BR	5
C179 (7.5L)	LH side of engine compartment, on EEC power relay	151- 8- C9	150- 2	BR	5
C180 (4.9L)	LH rear of engine, on EGR control solenoid	151- 1- A8		BK	2
C180 (5.0L)(5.8L)	LH side of engine, on EGR control soloenoid	151- 4- A5		BK	2
C181	LH rear of engine, on EGR vacuum regulator (EVR) solenoid	151- 7- A6		BK	2
C182 (4.9L)	Top LH rear of engine, on EGR valve position sensor	151- 1- A4		BK	4
C182 (5.0L)(5.8L)	Front RH side of engine, on EGR valve posiiton sensor	151- 3- C1		BK	4
C182 (7.5L)	LH rear of engine, on EGR valve position (EVP) sensor	151- 7- A6		BK	4
C183 (4.9L)	Center front of engine, on engine coolant temperature (ECT) sensor	151- 1- F4		BK	2
C183 (5.0L)(5.8L)	Center front of engine, on engine coolant temperature (ECT sensor	151- 4- D2		BK	2
C183 (7.5L)	Center front of engine, on engine coolant temperature (ECT) sensor	151- 7- F4		BK	2
C184	Top LH front of engine, on engine RPM sensor	151- 5- F7		BK	2
C185 (4.9L)	LH side of safety wall, on electronic engine control (EEC) module	151- 2- A9	150- 3	GY	60
C185 (5.0L)(5.8L)	LH side of safety wall, on electronic engine cotrol (EEC) module	151- 3- A9	150- 3	GY	60
C185 (7.5L)	LH side of safety wall, on electronic engine control (EEC) module	151- 7- A8	150- 5	GY	60
C186	Top RH front of engine, on engine temperature switch	151- 5- F4			

★ No Figure Available

Connector	Location	Page Zone	Connector Page	Color	Terminal
C187	LH side of engine, on fuel injection pump lever (FIPL) sensor	151- 6- F7		BK	3
C188	Front RH side of engine, on fuel line heater	*			
C189 (4.9L)	LH side of engine compartment, on fuel pump relay	151- 2- D9	150- 8	GR	5
C189 (5.0L)(5.8L)	LH side of engine compartment, on fuel pump relay	151- 4- D9	150- 8	GR	5
C189 (7.5L)	LH side of engine compartment, on fuel pump relay	151- 7- D9	150- 8	GR	5
C190	Top of engine, on fuel injector #1	151- 3- A5		BK	2
C191	Top of engine, on fuel injector #2	151- 3- A5		BK	2
C192	Top of engine, on fuel injector #3	151- 3- A5		BK	2
C193	Top of engine, on fuel injector #4	151- 3- A5		BK	2
C194	Top of engine, on fuel injector #5	151- 3- A5		BK	2
C195	Top of engine, on fuel injector #6	151- 3- A5		BK	2
C196	Top of engine, on fuel injector #7	151- 3- A5		BK	2
C197	Top of engine, on fuel injector #8	151- 3- A5		BK	2
C198 VIP Test Connector (4.9L)	LH side of engine compartment, on relay bracket	151- 1-D10	150-22	BK	6
C198 VIP Test Connector (5.0L)(5.8L)	LH side of engine compartment, on relay bracket	151- 3- C9	150-22	BK	6
C198 VIP Test Connector (7.3L)	LH side of engine compartment, on relay bracket	151- 5- D9	150-22	Bk	6
C198 VIP Test Connector (7.5L)	LH side of engine compartment, on relay bracket	151- 8- D9	150-22	BK	6
C199 VIP Test Connector (4.9L)	LH side of engine compartment, on relay bracket	151- 1-D10	150-22	GY	1
C199 VIP Test Connector (5.0L)(5.8L)	LH side of engine compartment, on relay bracket	151- 3- C9	150-22	GY	1
C199 VIP Test Connector (7.3L)	LH side of engine compartment, on relay bracket	151- 5- D9	150-22	GY	1
C199 VIP Test Connector (7.5L)	LH side of engine compartment, on relay bracket	151- 8- D9	150-22	GY	1
C200	Behind LH cowl panel	151-10-E10		BR	6
C201	Behind LH cowl panel	151-10-E10		BR	2
C202 (4.9L)	LH rear of engine compartment, in safety wall	151- 1- A9		N	53
C202 (5.0L)(5.8L)	LH rear of engine compartment, in safety wall	151- 3- A8		N	53
C202 (7.3L)	LH rear of engine compartment, in safety wall	151- 6- B9		N	53
C202 (7.5L)	LH rear of engine compartment, in safety wall	151- 7- A7		N	53
C203	Behind RH cowl panel	151-10- F2		BR	6
C204	Behind center of I/P, near radio	151-10- F5			3
C206	Behind LH side of I/P, near LH side of steering column	151-10-D10		BK	7
C207	Behind LH side of I/P, on fuse panel	151-10-D10		N	1
C208	Behind LH side of I/P, on fuse panel	151-10-D10		BL	1

* No Figure Available

Connector	Location	Page Zone	Connector Page	Color	Terminal
C209	Behind RH cowl panel	151-10- E1		GY	8
C211	Behind LH cowl panel	151-10-E10		GY	2
C212	Behind LH cowl panel	151-12- A3		GY	8
C213	Behind RH cowl panel	151-12- A6		GR	8
C216	Behind center of I/P, on speed control amplifier	151-10- F6	150-17	GR	6
C217	Behind center of I/P, on speed control amplifier	151-10- F5	150-17	N	8
C218	Behind LH side of I/P, near C202	151-10- F9		BK	8
C219	Top LH side of steering column, on multi-function switch	*	150-14		
C220	Below center of vehicle, near transfer case assembly	*	150-19		
C221	Behind RH cowl panel, on electronic shift control module	151-12- A6	150- 7	N	8
C222	Behind RH cowl panel, on electronic shift control module	151-12- A5	150- 7	GY	8
C223	Behind RH cowl panel, on electronic shift control module	151-12- A6	150- 7	BR	5
C224	Behind RH cowl panel	151-10- E1		GY	2
C226	Behind LH side of I/P, taped to harness	151-10-F10		BK	3
C227	Behind LH cowl panel	151-10-E10		GY	2
C228	Behind RH cowl panel	151-10- F3		GY	2
C229	Behind LH cowl panel	151-10-E10		GY	4
C230	Below RH side of driver's seat	151-12- F5		GY	2
C250 (Diesel Engine)	Behind top LH side of I/P, on instrument cluster	151-10- A8	150-12	GY	14
C250 (Gasoline Engines)	Behind top LH side of I/P, on instrument cluster	151-10- A8	150-11	GY	14
C251 (Diesel Engine)	Behind top LH side of I/P, on instrument cluster	151-10- A8	150-12	BR	14
C251 (Gasoline Engines)	Behind top LH side of I/P, on instrument cluster	151-10- A8	150-11	BR	14
C257	Behind center of I/P, on radio	151-10- F4	150-15	BK	8
C258	Behind center of I/P, on radio	151-10- F5	150-15	BK	8
C260	Center of I/P, on blower switch	151-10- B4	150- 1	GY	5
C261	Behind LH side of I/P, on clutch interlock switch	151-10- F7	150- 1	BK	6
C261	Behind LH side of I/P, on clutch interlock switch jumper	151-10- F7		BK	6
C262	On front of RH door jamb, on right courtesy lamp switch	151-12- A6		N	3
C263	On front of LH door jamb, on left courtesy lamp switch			N	3
C264	Behind LH side of I/P, on diesel warning lamp display	151-10- A6		GY	4
C265	Front LH side of floor pan, on dimmer switch	151-10-F10		BK	3
C267	LH side of I/P, on electronic shift control switch	151-10- A5	150- 8	BK	5
C268	LH side of I/P, on fuel tank selector switch	151-10- A9	150- 9	GY	6
C269	Top RH side of steering column, on ignition switch	151-10- F6	150-10	BK	11
C270	Behind RH side of I/P, on horn relay	151-10- C1	150- 9	BR	5

* No Figure Available

Connector	Location	Page Zone	Connector Page	Color	Terminal
C271	Behind LH side of I/P, on inertia switch	151-10- F8		GY	3
C273	Behind LH side of I/P, on main light switch	151-10-C10		GY	9
C274	LH side of I/P, on master tailgate window switch	151-10- A8	150-13	GY	5
C275	Behind LH center of I/P, on overdrive switch	151-10- B6	150-15	GY	6
C276	Behind LH side of I/P, on park brake switch	151-10-D10		BK	1
C277	Behind center of I/P, on rear anti-lock brakes (RABS) module	151-10- F6	150-16	BK	14
C278	Behind LH side of I/P, on rear window defrost switch	151-10-C10	150-16	W	5
C279	Behind LH side of I/P, on stop lamp switch	151-10- B8		BK	2
C280	Behind LH side of I/P, on warning chime module	151-10- B6	150-19	GY	7
C281	Behind LH side of I/P, on windshield/washer switch	151-10-B10		BK	7
C290	Behind LH side of I/P, on windshield wiper/washer controls lamp	151-10-B10		BK	2
C292	Behind RH side of I/P, on glove compartment lamp	151-10- A2		BR	2
C293	Behind center of I/P, on ashtray illumination	*		BK	2
C294	Behind center of I/P, on cigar lighter	*		BK	1
C295	Behind RH side of I/P, on hazard flasher	151-10- D1		BK	2
C296	Behind center of I/P, on A/C-heater control assembly	151-10- B4		W	4
C297	Behind center of I/P, on heater control assembly	*		W	4
C298	Behind center of I/P, on heater controls illumination	*		BR	2
C300	At base of LH "B" pillar	151-12- E4		GY	4
C301	At base of LH "B" pillar	151-12- E4		GY	4
C307 (Bronco)	Behind trim panel on LH side of cargo area, on cargo lamp	151-12- F5		BK	2
C307 (Pickup)	Behind rear of headliner, on cargo lamp	151-13- A7		BK	2
C308	Behind trim panel, on right rear speaker	151-12- A2		GY	2
C309	Behind trim panel, on left rear speaker	151-12- A7		GY	2
C310	Near rear window, on rear window defrost grid	*		BK	1
C311	Near rear window, on rear window defrost grid	*		BK	1
C400	Below LH rear of vehicle, near rear crossmember	151-11- E8		BK	4
C401	Below LH rear of vehicle, near rear crossmember	151-11- E7		GY	8
C403	Below LH rear of vehicle, near center crossmember	*		BL	4
C405	Below rear of vehicle, on RH frame rail	151-11-E10		GY	4
C406	Below rear of vehicle, on LH frame rail	151-12- E6		GY	8
C407	Below LH rear of vehicle, near rear crossmember	151-11- E8		GY	4

* No Figure Available

Connector	Location	Page Zone	Connector Page	Color	Terminal
C408	Below RH rear corner of vehicle	151-13-E10		BK	4
C409	Below LH rear corner of vehicle	★		BK	4
C410	Below center rear of vehicle, near rear body marker lamps	★		BK	4
C411	In LH rear quarter panel, forward of wheel well	★		BK	4
C412	In LH rear quarter panel, rear of wheel well	★		BK	4
C413	In RH rear quarter panel, forward of wheel well	★		BK	4
C414	On LH frame rail, near shock absorber	151-11- E6		BK	2
C415	Below rear of vehicle, on LH frame rail	151-12- E6		BK	1
C416	LH rear of vehicle, near rear light assembly	151-12- F7		BK	1
C417	Below LH rear of vehicle, near rear crossmember	151-11- E8		GY	4
C418	LH rear of vehicle, near rear light assembly	151-11- E9		GY	3
C419	Below LH rear of vehicle, near rear crossmember	151-13-B10		BK	1
C420	In RH rear quarter panel, rear of wheel well	★		BK	4
C421	Top of front fuel tank, on front tank fuel gauge sender	151-11- F5		GY	2
C422	Top of fuel tank, on fuel gauge sender and pump	151-11- E5		GY	4
C423	On LH frame rail, on fuel tank selector valve	151-11- C6	150- 9	GY	6
C425	Below rear of vehicle, on RABS rear axle sensor	151-11- B8		BK	2
C427	Top of rear fuel tank, on rear tank fuel gauge sender	151-11- C9		GY	2
C428	In LH side of tailgate, on tailgate latch switch	151-12- F8		BK	2
C429	In center of tailgate, on tailgate power window motor	151-12-E10		GY	2
C430	In LH side of tailgate, on tailgate window switch	151-12- F8			
C431	Rear of vehicle, on left rear park/stop/turn lamp	151-12- E8		BK	3
C432	Rear of vehicle, on right rear park/stop/turn lamp	151-12-C10		BK	3
C433 (With Chassis Cab)	Rear of vehicle, on left backup lamp	151-12- F7		BK	1
C433 (Without Chassis Cab)	Rear of vehicle, on left backup lamp	151-12- F7		BK	2
C434 (With Chassis Cab)	Rear of vehicle, on right backup lamp	151-12-D10		BK	1
C434 (Without Chassis Cab)	Rear of vehicle, on right backup lamp	151-12-D10		BK	2
C435	Rear of vehicle, on license lamp	151-11- E9		BK	2
C436	Rear of vehicle, on license lamp	151-12- F9		BK	2
C440	Rear of vehicle, on right rear park lamp	151-11-D10		BK	2
C441	Rear of vehicle, on left rear park lamp	151-11- F9		BK	2
C442	In front fuel tank, on front tank fuel gauge sender and pump	★		GY	4
C443	In rear fuel tank, on rear tank fuel gauge sender and pump	★		GY	4

★ No Figure Available

Connector	Location	Page Zone	Connector Page	Color	Terminal
C500	In front of LH door	151-12- E2			2
C502	In LH door, on left door lock motor	151-12- E1		GR	2
C503	In LH door, on master window control switch/left door lock control switch	151-12- E1	150-23	BK	15
C505	In LH door, on left front door speaker	151-12-B10		GY	2
C600	In front of RH door	151-12- A7			2
C602	In RH door, on right door lock motor	151-12- A9		GR	2
C603	In RH door, on right window control switch/right door lock control switch	151-12- A9	150-23	BK	10
C605	In right door, on right front door speaker	151-12- F4		GY	2
C900	Top of cab, above RH side of windshield header	151-13- A6		BK	2
C901	Top of cab, above RH center of windshield header	151-13- A5		BK	2
C902	Top of cab, above center of windshield header	151-13- A5		BK	2
C903	Top of cab, above LH center of windshield header	151-13- A4		BK	2
C904	Top of cab, above LH side of windshield header	151-13- A4		BK	2
C905 (With Map Lamp)	Center of headliner, on map/dome lamp	151-13- A6		GY	1
C905 (Without Map Lamp)	Center of headliner, on dome lamp	151-13- A6		GY	1
C906 (With Map Lamp)	Center of headliner, on map/dome lamp	151-13- A6		GY	1
C906 (Without Map Lamp)	Center of headliner, on dome lamp	151-13- A6		GY	1
C1000	Top of engine, on fuel shut off solenoid	151- 6- F6			1
C1001	Front RH side of engine, on fuel water switch	151- 6- B2			3
C1002	Top of engine, on glow plug controller	151- 6- A5			6
C1003 (Over 8500 GVW)	Below RH side of vehicle, on heated exhaust gas oxygen (HEGO) sensor	151-11- A5		BK	4
C1003 (Under 8500 GVW)	RH rear of engine compartment, on heated exhaust gas oxygen (HEGO) sensor	*		W	4
C1005	Front LH side of lower radiator support, on low pitch horn	151- 1- F8		BK	1
C1006	Front LH side of lower radiator support, on high pitch horn	151- 1- F8		BK	1
C1007 (4.9L)	LH side of engine, on idle air bypass valve	151- 2- F5		BK	2
C1007 (5.0L)(5.8L)	Center of engine, on idle air bypass valve	151- 3- F6		BK	2
C1007 (7.5L)	Top center of engine, on idle air bypass valve	151- 8- F5		Bk	2
C1008 (4.9L)	Lower LH side of engine, on ignition coil	151- 1- F6		BR	3
C1008 (5.0L)(5.8L)	LH rear of engine, on ignition coil	151- 3- A7		BR	3
C1008 (7.5L)	LH side of engine, on ignition coil	151- 8- A7		BR	3

* No Figure Available

Connector	Location	Page Zone	Connector Page	Color	Terminal
C1009 (4.9L)	LH side of engine, on knock sensor	151- 1- F6		BK	2
C1009 (5.0L)	Center rear of engine, on knock sensor	151- 4- A4		BK	2
C1010	RH side of engine compartment, on low vacuum warning switch	151- 9- F4		BK	3
C1011 (4.9L)	RH side of engine compartment, on manifold absolute pressure (MAP) sensor	151- 1- A1		BK	3
C1011 (5.0L)(5.8L)	RH side of engine compartment, on manifold absolute pressure (MAP) sensor	151- 4- A3		BK	3
C1011 (7.3L)	RH side of engine compartment, on manifold absolute pressure (MAP) sensor	151- 5- A3		BK	3
C1011 (7.5L)	RH side of engine compartment, on manifold absolute pressure (MAP) sensor	151- 7- B1		BK	3
C1012	Below center of vehicle, on manual lever position sensor	151-11- C1	150-13	BK	8
C1013 (4.9L)	Lower LH rear of engine, on oil pressure switch	151- 2- D6		BVK	1
C1013 (5.0L)(5.8L)	Lower LH side of engine, on oil pressure switch	151- 4- D9		BK	1
C1013 (7.3L)	Top LH rear of engine, on oil pressure switch	151- 5- A5		BK	1
C1013 (7.5L)	Top rear of engine, on oil pressure switch	151- 7- A4		BK	1
C1014	LH front of engine, on overheat warning switch	151- 6- D9			1
C1015	RH side of engine, on plugged fuel filter switch	151- 5- B2			1
C1016	Lower LH front of engine compartment, on power steering pressure switch	*		BK	2
C1017 (4.9L)	LH side of engine, on radio capacitor	151- 1- F5		GY	2
C1017 (5.0L)(5.8L)	LH side of engine, on radio capacitor	151- 3- A8		GY	2
C1017 (7.3L)	RH side of engine compartment, on radio capacitor	*			1
C1017 (7.5L)	LH side of engine, on radio capacitor	151- 8- A7		GY	2
C1018 (4.9L)	LH rear of engine compartment, on speed control servo	151- 2- B9	150-17	BR	6
C1018 (5.0L)(5.8L)	LH rear of engine compartment, on speed control servo	151- 4-B10	150-17	BR	6
C1018 (7.3L)	LH rear of engine compartment, on speed control servo	151- 5- A9	150-17	BR	6
C1018 (7.5L)	LH rear of engine compartment, on speed control servo	151- 7- C9	150-17	BR	6
C1019 SPOUT Check Connector (4.9L)	LH side of engine, near TFI ignition module	151- 2- F7		BK	2
C1019 SPOUT Check Connector (5.0L)(5.8L)	Front of engine, near TFI ignition module	151- 4- F6		BK	2
C1019 SPOUT Check Connector (7.5L)	Rear of LH fender apron, near TFI ignition module	151- 7- B9		BK	2
C1020	LH side of engine compartment, on TECA power relay	151- 5- C9	150-18	BR	5

* No Figure Available

Connector	Location	Page Zone	Connector Page	Color	Terminal
C1021 (4.9L)	LH side of engine, on TFI ignition module	151- 1- F7	150-18	GY	6
C1021 (7.5L)	Rear of LH fender apron, on TFI ignition module	151- 7- A6	150-18	GY	6
C1022 (4.9L)	LH side of engine, on thermactor air bypass (TAB) solenoid	151- 2- A5		BK	2
C1022 (5.0L) (5.8L)	LH side of engine, on thermactor air bypass (TAB) solenoid	151- 3- A6		BK	2
C1022 (7.5L)	LH side of engine, on thermactor air bypass (TAB) solenoid	151- 7- A6		BK	2
C1023 (4.9L)	LH rear of engine, on thermactor air diverter (TAD) solenoid	151- 1- A6		BK	2
C1023 (5.0L) (5.8L)	LH side of engine, on thermactor air diverter (TAD) solenoid	151- 4- A6		BK	2
C1024 (4.9L)	LH rear of engine, on throttle position sensor (TPS)	151- 2- A4		BK	3
C1024 (5.0L) (5.8L)	Top center of engine, on throttle position sensor (TPS)	151- 3- F5		BK	3
C1024 (7.5L)	Top LH side of engine, on throttle position sensor (TPS)	151- 7- A5		BK	3
C1025	LH side of engine compartment, on trailer marker lamps relay		150-18	GY	5
C1027	LH side of safety wall, on transmission electronic control (TECA) module	151- 6- A9	150-20	GY	60
C1028 (Automatic)	Below center of vehicle, on vehicle speed sensor	151-11- A6		BK	2
C1028 (Manual)	Below center of vehicle, on vehicle speed sensor	151-11- D3		BK	2
C1029	RH side of engine compartment, on volotage rergulator	151- 9- F5		BK	4
C1030 (4.9L)	LH front of engine compartment, on washer pump motor	151- 2-E10		BK	2
C1030 (5.0L) (5.8L)	LH front of engine compartment, on washer pump motor	151- 3-E10		BK	2
C1030 (7.3L)	LH side of engine compartment, on washer pump motor	151- 6- D9		BK	2
C1030 (7.5L)	LH front of engine compartment, on washer pump motor	151- 8-E10		BK	2
C1031	Front of vehicle, on left front park/turn lamp	151- 8- F9			3
C1032	Front of vehicle, on right front park/turn lamp	151- 8- F2			3
C1033	Front of vehicle, on left headlamp	151- 7- F8		BK	3
C1034	Front of vehicle, on right headlamp	151- 7- F2		BK	3
C1035	In engine compartment, on engine lamp			BR	2
C1040	On glow plug #1	*			1
C1041	On glow plug #2	*			1
C1042	On glow plug #3	*			1
C1043	On glow plug #4	*			1
C1044	On glow plug #5	*			1
C1045	On glow plug #6	*			1
C1046	On glow plug #7	*			1
C1047	On glow plug #8	*			1
C1048	Below center of vehicle, on E4OD transmission	151-11- A4	150- 8	GY	12
C1050	Front RH side of engine, on leece/neville alternator	*		BK	1

* No Figure Available

Connector	Location	Page Zone	Connector Page	Color	Terminal
C1051	Front RH side of engine, on leece/neville alternator	*		BK	1

* No Figure Available

Ground	Location	Page Zone
G100 (4.9L)	LH front of engine compartment, top of upper radiator support	151- 2- F9
G100 (5.0L)(5.8L)	LH front of engine compartment, on upper radiator support	151- 4- F7
G100 (7.3L)	LH front of engine compartment, on upper radiator support	151- 5- E9
G100 (7.5L)	LH front of engine compartment, on upper radiator support	151- 7- F7
G101 (4.9L)	RH front of engine compartment, top of upper radiator support	151- 2- F3
G101 (5.0L)(5.8L)	RH front of engine compartment, on upper radiator support	151- 4- E2
G101 (7.3L)	Front of RH fender apron	151- 9- B9
G101 (7.5L)	RH front of engine compartment, on upper radiator support	151- 7- E1
G102	RH side of engine compartment, near voltage regulator	151- 6- B2
G104 (4.9L)	Rear of LH fender apron	151- 2-B10
G104 (5.0L)(5.8L)(7.3L)	Rear of LH fender apron	151- 4- B9
G104 (7.5L)	Rear of LH fender apron	151- 8- A9
G106	Lower LH front of engine	*
G107	Lower RH front of engine	151- 5- F4
G108	RH side of engine compartment, on crossmember, below engine	*
G200	Behind center of I/P, near RH side of rear anti-lock brakes (RABS) module	151-10- F4
G201	Below LH side of I/P, near LH side of steering column	151-10-D10
G202	Behind RH cowl panel	151-12- A6
G204	Top of steering column	*
G400	LH rear of cargo area, near rear light assembly	151-12- F6
G401	Below LH rear of vehicle, on rear crossmember	151-11- E7
G500	In driver's door, below speaker	151-12- A2

* No Figure Available

Splice	Location
S100	Engine harness, near T/O to right headlamp
S101	Engine control harness, near T/O to C100
S102	Engine harness, near T/O to C106
S103	Engine harness, near T/O to left headlamp
S106 (Diesel Engines)	Engine harness, near T/O to G100
S106 (Gasoline Engines)	Engine harness, near T/O to G101
S107 (With DRL)	Engine harness, near T/O to C113
S107 (Without DRL)	Engine harness, near T/O to C106
S114	Engine harness, near T/O to C105
S115 (With DRL)	Engine harness, near T/O to C106
S115 (Without DRL)	Engine harness, near T/O to C202
S117	Engine harness, near T/O to low vacuum warning switch
S121	Engine harness, near T/O to electronic engine control (EEC) module
S122	Engine harness, near T/O TO C106
S123 (4.9L)	Engine harness, near T/O to electronic engine control (EEC) module
S124	Dash panel to engine harness, near T/O to oil pressure sender
S125	Engine harness, near T/O to TFI ignition module
S126	Engine harness, near T/O to EEC power relay
S128 (5.0L)	Fuel charge harness, near T/O to fuel injector #8
S128 (5.8L)	Fuel charge harness, near T/O to fuel injector #6
S128 (7.5L)	Fuel charge harness, near T/O to fuel injector #6
S129	Fuel charge harness, near T/O to fuel injector #3
S130	Fuel charge harness, near T/O to fuel injector #4
S131 (4.9L)	Fuel charge harness, near T/O to fuel injector #5
S131 (5.0L)	Fuel charge harness, near T/O to knock sensor
S131 (5.8L)	Fuel charge harness, near T/O to fuel injector #8
S131 (7.5L)	Fuel charge harness, near T/O to fuel injector #4
S132 (4.9L)	Fuel charge harness, near T/O to fuel injector #3
S132 (5.0L)(5.8L)	Fuel charge harness, near T/O to fuel injector #8
S132 (7.5L)	Fuel charge harness, near T/O to fuel injector #4
S133 (4.9L)	Dash panel to engine harness, near T/O to C125
S133 (5.0L)(5.8L)	Fuel charge harness, near T/O to fuel injector #4
S133 (7.5L)	Fuel charge harness, near T/O to thermactor air bypass (TAB) solenoid
S134 (C6 Transmission)	Backup lamp harness, near T/O to C127
S134 (E40D Transmission)	Backup lamp harness, near T/O to manual lever position sensor
S135 (4.9L)	Dash panel to engine harness, near T/O to EGR valve position (EVP) sensor
S135 (7.5L)	Fuel charge harness, near T/O to ignition coil

Splice	Location
S137	Engine harness, near T/O to C122
S138	Fuel charge harness, near T/O to air charge temperature (ACT) sensor
S140 (With DRL)	Engine harness, near T/O to C113
S140 (Without DRL)	Engine harness, near T/O to electronic engine control (EEC) module
S141	Rear lamp harness, near T/O to C102
S142	Engine harness, near T/O to C113
S143	Rear lamp harness, near T/O to C158
S144	Fuel charge harness, near T/O to canister purge solenoid
S146	Backup lamp harness, near T/O to C117
S147	Engine harness, near T/O to C102
S148	Engine harness, near T/O to horns
S150	Engine harness, near T/O to C113
S151	Engine harness, near T/O to C113
S152	Heater switch to blower motor harness, near T/O to blower motor
S153	Heater switch to blower motor harness, near T/O to A/C clutch cycling pressure switch
S154	Engine harness, near T/O to washer pump motor
S155	Engine harness, near T/O to washer pump motor
S156	Engine harness, near T/O to C106
S157	Engine harness, near T/O to C105
S159	Trailer battery feed harness, in T/O to C105
S163 (With DRL)	Engine harness, near T/O to C113
S163 (Without DRL)	Engine harness, near T/O to washer pump motor
S164	Engine harness, near T/O to C105
S165	Engine harness, near T/O to C102
S167	Engine harness, near T/O to C202
S168	Alternator rectifier harness, near T/O to G109
S171	Engine harness, near T/O to C106
S198	Backup lamps harness, near T/O to C117
S199 (4.9L)	Dash panel to engine harness, near T/O to TFI ignition module
S199 (5.0L) (5.8L)	Fuel charge harness, near T/O to ignition coil
S199 (7.5L)	Fuel charge harness, near T/O to distributor
S200	Main harness, near T/O to C206
S202	Main harness, near T/O to G200
S203	Main harness, near T/O to C204
S204	Heater switch to blower harness, near T/O to blower motor resistor
S205	Main harness, near T/O to master tailgate window switch
S206	Main harness, near T/O to C206

Splice	Location
S208	Main harness, near T/O to fuse panel
S209	Main harness, near T/O to fuse panel
S210	Main harness, near T/O to C250
S211	Main harness, near T/O to ignition switch
S212	Main harness, near T/O to main light switch
S213	Main harness, near T/O to main light switch
S214	Main harness, near T/O to warning chime module
S215	Main harness, near T/O to C250
S218	Main harness, near T/O to warning chime module
S220	Main harness, near T/O to rear anti-lock brake (RABS) module
S221	Main harness, near T/O to C204
S222	Window regulator relay switch harness, near T/O to C211
S223	Main harness, near T/O to diesel warning lamp display
S224	Main harness, near T/O to clutch interlock switch
S226	Main harness, near T/O to G200
S227	Main harness, near T/O to rear anti-lock brake (RABS) module
S228	Main harness, near T/O to rear anti-lock brake (RABS) module
S229	Main harness, near T/O to blower switch
S230	Main harness, near T/O to C227
S231	Window regulator relay switch harness, near T/O to C211
S232	Window regulator left front door harness, near T/O to left front door speaker
S233	Window regulator left front door harness, near T/O to left front door speaker
S240	Main harness, near T/O to ignition switch
S299	Main harness, near T/O to left courtesy lamp switch
S301	Interior lamp feed harness, near T/O to C301
S303	Interior lamp feed harness, near T/O to C301
S304	Interior lamp feed harness, near T/O to C300
S305	Interior lamp feed harness, near T/O to dom e lamp
S306	Interior lamp feed harness, near T/O to dome lamp
S400 (Dual Tanks)	Rear lamps harness, near T/O to C401
S400 (Single Tank)	Rear lamps harness, near T/O to fuel gauge sender and pump
S401	Rear lamps harness, near T/O to fuel gauge sender and pump
S403	Rear license lamp harness, near T/O to C400
S404	Rear lamp connector harness, near T/O to C419
S405	Rear lamp connector harness, near T/O to right backup lamp
S406	Right rear lamp extension harness, near T/O to C416
S409	Left marker lamp harness, near T/O to C412

Splice	Location
S410	Right marker lamp harness, near T/O to C420
S412 (Bronco)	Rear lamps harness, near T/O to fuel gauge sender and pump
S412 (F-Series)	Rear lamp connector harness, near T/O to C410
S413	Rear lamps harness, near T/O to rear fuel gauge sender and pump
S416	Rear lamps harness, near T/O to C401
S417 (Bronco)	Rear lamps harness, near T/O to C406
S417 (F-Series)	Rear lamp connector harness, near T/O to C419
S418	Rear license harness, near T/O to C400
S419	Rear lamps harness, near T/O to C401
S420	Rear lamp connector harness, near T/O to C419
S421	Left marker harness, near T/O to C412
S422	Right marker lamp harness, near T/O to C420
S423	Rear window regulator control harness, near T/O to tailgate window switch
S424	Rear lamp harness, near T/O to C406
S425	Rear lamps harness, near T/O to rear fuel gauge sender
S426	Rear lamp connector harness, rear T/O to C401
S427	Rear lamps harness, near T/O to C406

VEHICLE REPAIR LOCATION CODES

TO PINPOINT THE ACTUAL VEHICLE LOCATION OF A REPAIR. THE **VEHICLE REPAIR LOCATION CODE** IS REQUIRED.

FOR EXAMPLE, AN "X" HAS BEEN PLACED IN THE QUADRANT OF THE VEHICLE DIAGRAMS INDICATING THE LOCATION OF THE REPAIR. SEE DIAGRAMS.

LOCATION CODE, FOR THE EXAMPLE IS: **A5/FU** — (UNDER THE FLOOR OF DRIVER'S LEFT FOOT.)

FRONT/REAR DIRECTION

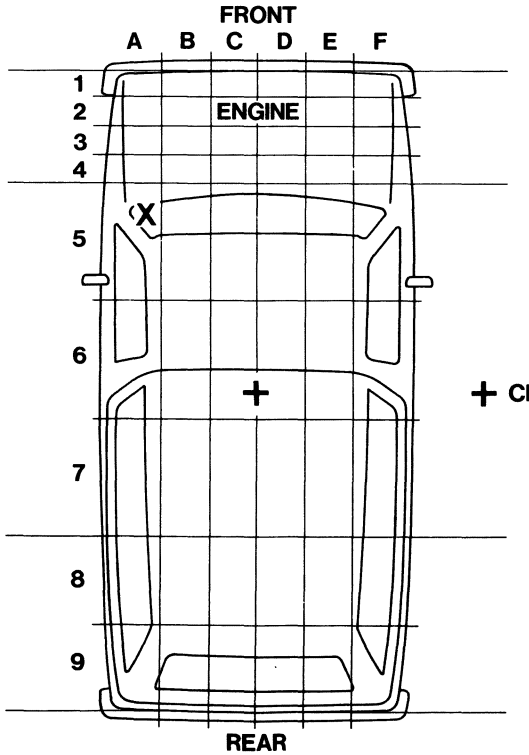

+ CENTER OF VEHICLE

OVER/UNDER DIRECTION

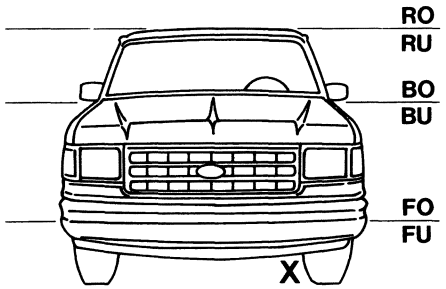

R = ROOF LINE
- RO = ROOF OVER
- RU = ROOF UNDER

B = BELT LINE
- BO = BELT OVER
- BU = BELT UNDER

F = FLOOR PAN
- FO = FLOOR OVER
- FU = FLOOR UNDER

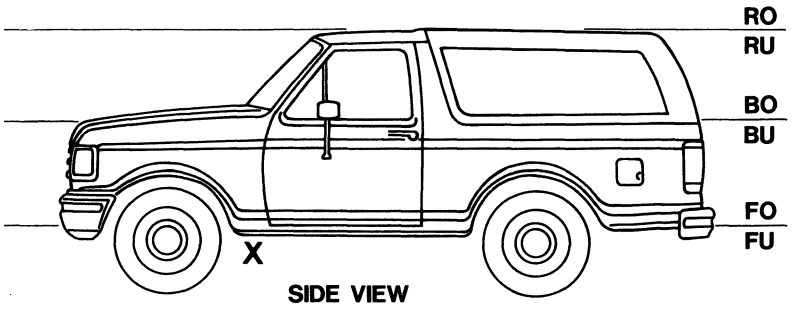

SIDE VIEW

BRONCO F150 F250 F350 SUPER DUTY

FPS-12129-91

We Want To Hear From You!

Tell us about yourself

Are you a: ❑ Ford Trained Technician ❑ Independent Technician ❑ Customer

❑ Other _____

1. Which section of the EVTM do you use most frequently?

   ❑ Schematics ❑ Diagnostics ❑ Component Location Information

2. How often do you refer to this Ford Service Publication?

   ❑ For all electrical problems

   ❑ For about 75% of electrical problems

   ❑ Fewer than 25% of electrical problems

3. Do the component location descriptions provide enough detail?

   ❑ Yes ❑ No

   Suggestions: _____

4. Would you prefer to have the electrical information for one vehicle, in one publication (separate electrical publications for each vehicle)?

   ❑ Yes ❑ No

5. Are connector views and corresponding information helpful when diagnosing electrical problems?

   ❑ Yes ❑ No

6. Would you like to include more component switch test information?

   ❑ Yes ❑ No

7. Do you read the "How to Use this Manual" and "How to Find the Electrical Concerns" sections of this manual?

   ❑ Yes ❑ No

   What additional information would be helpful? _____

8. Rate the purpose for using the location index. (5 is high, 1 is low)

   Connectors Splices Part Numbers Grounds

9. Are the full view, more comprehensive illustrations (located just prior to the Location Index) a helpful tool?

   ❑ Yes ❑ No

   Comment: _____

10. Please rate the overall effectiveness of the revised radio schematics and diagnostics.

    ❑ Good ❑ Fair ❑ Poor

11. How helpful are the "equivalent circuits" of electrical components, as shown on schematics, when troubleshooting electrical circuits?

    ❑ Good ❑ Fair ❑ Poor

    Overall Comments/Suggestions: _____

DO NOT STAPLE — USE TRANSPARENT TAPE

NO POSTAGE
NECESSARY
IF MAILED
IN THE
UNITED STATES

BUSINESS REPLY MAIL

FIRST CLASS PERMIT NO. 400 DEARBORN, MICH.

POSTAGE WILL BE PAID BY ADDRESSEE

Ford Parts and Service Division
Service Publications-ART
Room 2009
Post Office Box 1902
3000 Schaefer Road
Dearborn, Michigan 48121

ASE CERTIFIED™

WE SUPPORT VOLUNTARY TECHNICIAN CERTIFICATION

TOGETHER WE CAN SAVE LIVES

Ford

Service Publications

Ford Parts and Service Division

LITHO IN U.S.A.
AUGUST 1990

FPS-12129-91

Copyright © 1990
Ford Motor Company